Medium-Torque Ball Spline

Models LT, LF, LT-X, LF-X, LFK-X, and LFH-X

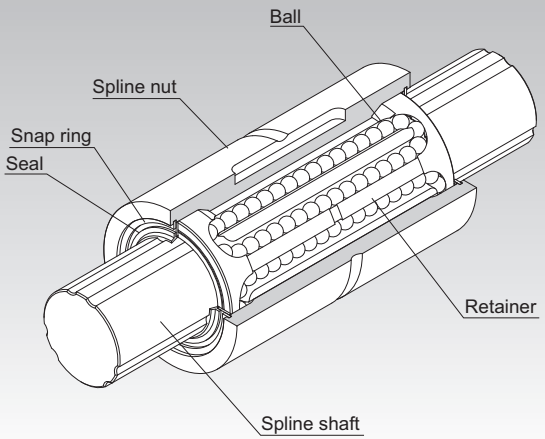

Fig. 1: Structure of Medium-Torque Ball Spline Model LT

Selection Criteria A3-6
Design Highlights A3-125
Options A3-128
Model No. A3-130
Handling Precautions A3-131
Lubrication Accessories A24-1
Mounting Procedure and Maintenance B3-32

Cross-Sectional Characteristics of the Spline Shaft A3-17
Equivalent Factor A3-29
Clearance in the Rotational Direction A3-32
Accuracy Standards A3-37
Maximum Manufacturing Lengths by Accuracy A3-123

Structure and Features

With the medium torque ball spline, the spline shaft has two to three crests on the circumference. Along both sides of each crest, two rows of balls (four to six rows in total) are arranged to hold the crest so that a reasonable preload is applied.
The rows of balls are held in a special resin retainer incorporated in the spline nut so that they smoothly roll and circulate. With this design, balls will not fall out even if the nut is removed from the spline shaft.

Large Load Capacity

The raceways are formed into circular-arc grooves approximate to the ball curvature and ensure angular contact. Thus, these models have a large load capacity in the radial and torque directions.

No Angular Backlash

Two parallel rows of balls provide a preload in an angular-contact structure by holding a crest formed on the circumference of the spline nut from either side at a contact angle of 20°. This eliminates angular backlash in the rotational direction and increases the rigidity.

High Rigidity

Since the contact angle is large and an appropriate preload is provided, high rigidity against torque and moment is achieved.

Ball Retaining Type

Use of a retainer prevents the balls from falling out even if the spline shaft is pulled out of the spline nut (except for models LT4 and 5).

Types and Features

Types of Spline Nuts

Cylindrical Ball Spline Model LT

Dimensional Table⇒A3-82

This is the most compact type with a straight cylindrical spline nut. When transmitting torque, a key is driven into the body.

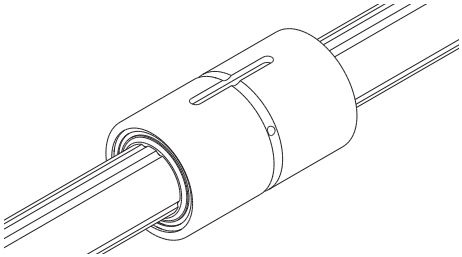

Flanged Ball Spline Model LF

Dimensional Table⇒A3-84

The spline nut can be attached to the housing via the flange, making assembly simple.
It is optimal for locations where the housing may be deformed if a keyway is machined on its surface, and where the housing width is small.

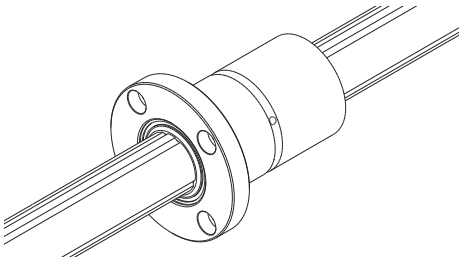

Compact Ball Spline Model LT-X

Dimensional Table⇒A3-86

The nut is more compact than that of the current Model LT thanks to the new circulating pathways.
The outer diameter of the nut is the same as that of the linear bushing.
The Model LT-XL is suitable for moment loads, torque, and overhanging loads that exceed those tolerated by the Model LT-X.
Models LT4X to 6X are made of stainless steel, which has high corrosion resistance.

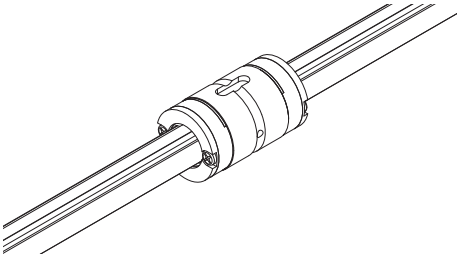

Compact Ball Spline Model LF-X

Dimensional Table⇒A3-88

The nut is more compact than that of the current Model LF thanks to the new circulating pathways.
The outer diameter of the nut is the same as that of the linear bushing.
The Model LF-XL is suitable for moment loads, torque, and overhanging loads that exceed those tolerated by the Model LF-X.
Models LF4X to 6X are made of stainless steel, which has high corrosion resistance.

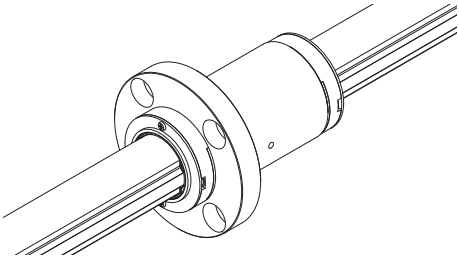

Compact Ball Spline Model LFK-X

Dimensional Table⇒A3-90

The flange is similar to the Model LF-X, but flattened in four places. Compared to models with round flanges, its core height is lower, and it allows for more compact designs.
The Model LFK-XL is suitable for moment loads or torque and overhanging loads that exceed those tolerated by the Model LFK-X.
Models LFK5X and 6X are made of stainless steel, which has high corrosion resistance.

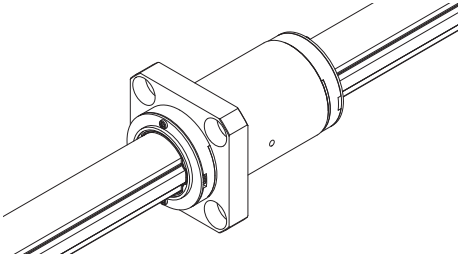

Compact Ball Spline Model LFH-X

Dimensional Table⇒A3-92

The flange is similar to the Model LF-X, but flattened in two places. Compared to models with square flanges, its core height is lower, and it allows for more compact designs.
The Model LFH-XL is suitable for moment loads or torque and overhanging loads that exceed those tolerated by the Model LFH-X.
Models LFH5X and 6X are made of stainless steel, which has high corrosion resistance.

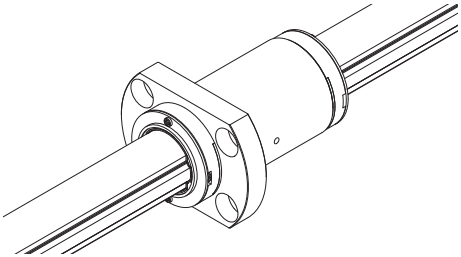

Types of Spline Shafts

Precision Solid Spline Shaft (Standard Type)

The raceway of the spline shaft is precision ground. It is used in combination with a spline nut.

Special Spline Shaft

THK manufactures a spline shaft with thicker ends or a thicker middle area through special processing at your request.

Hollow Spline Shaft (Type K)

A drawn, hollow spline shaft is available for requirements such as piping, wiring, air ventilation, and weight reduction.

Thick

Hollow Spline Shaft (Type N)

A drawn, hollow spline shaft is available for requirements such as piping, wiring, air ventilation, and weight reduction.

Thin

Housing Inner-Diameter Tolerance

When fitting the spline nut to the housing, transition fit is normally recommended. If the accuracy of the ball spline does not need to be very high, clearance fit is also acceptable.

Table 1: Housing Inner-Diameter Tolerance

Housing inner-diameter tolerance	General conditions	H7
	When clearance needs to be small	J6

Model LT

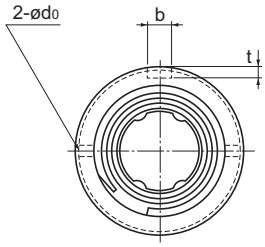

Models LT4 to 13

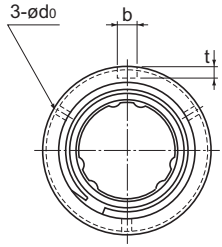

Models LT16 to 100

Model No.	Spline nut dimensions								
	Outer diameter		Length		b H8	Keyway dimensions		r	Lubrication hole
	D	Tolerance	L	Tolerance		t +0.1 0	ℓ_0		d_0
LT 4[1]	10	0 −0.009	16	0 −0.2	2	1.2	6	0.5	—
LT 5[1]	12	0 −0.011	20		2.5	1.2	8	0.5	—
LT 6	14		25		2.5	1.2	10.5	0.5	1
LT 8	16		25		2.5	1.2	10.5	0.5	1.5
LT 10	21	0 −0.013	33		3	1.5	13	0.5	1.5
LT 13	24		36		3	1.5	15	0.5	1.5
○ LT 16	31		50		3.5	2	17.5	0.5	2
○ LT 20	35	0 −0.016	63		4	2.5	29	0.5	2
○ LT 25	42		71	0 −0.3	4	2.5	36	0.5	3
○ LT 30	47		80		4	2.5	42	0.5	3
○ LT 40	64	0 −0.019	100		6	3.5	52	0.5	4
○ LT 50	80		125		8	4	58	1	4
○ LT 60	90	0 −0.022	140	0 −0.4	12	5	67	1	5
○ LT 80	120		160		16	6	76	2	5
○ LT 100	150	0 −0.025	185		20	7	110	2.5	5

○: Indicates model numbers for which high temperature types are available (with metal retainer; service temperature: up to 100℃).

(Example) LT20 A CL+500L H
└──── High temperature symbol

Model number coding

2 LT30 UU CL +500L H K

- 2: Number of spline nuts on one shaft (no symbol for one nut)
- LT30: Model No.
- UU: Contamination protection accessory symbol [1]
- CL: Symbol for clearance in the rotational direction [2]
- +500L: Overall spline shaft length[5] (in mm)
- H: Accuracy symbol [3]
- K: Symbol for spline shaft[4]

[1] See A3-128. [2] See A3-32. [3] See A3-37. [4] See A3-95. [5] See A3-123.

Download data from the THK Online Services website. https://www.thk.com/

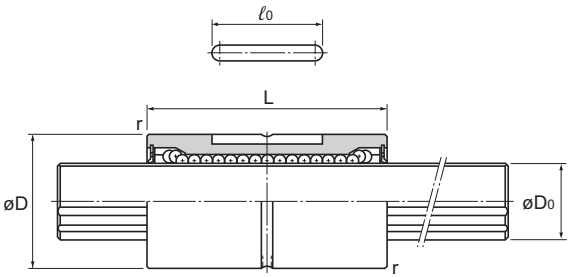

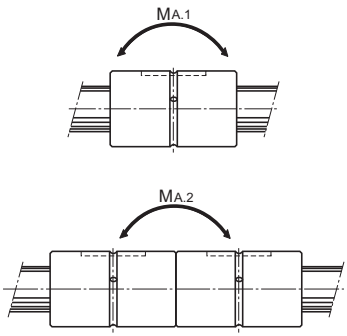

Unit: mm

Spline shaft diameter D_0 h7	Rows of balls	Basic torque rating C_T N·m	Basic torque rating C_{0T} N·m	Basic load rating C kN	Basic load rating C_0 kN	Static permissible moment $M_{A.1}$[2] N·m	Static permissible moment $M_{A.2}$[3] N·m	Mass Spline nut g	Mass Spline shaft kg/m
4	4	0.59	0.78	0.44	0.61	0.88	6.4	5.2	0.1
5	4	0.88	1.37	0.66	0.88	1.5	11.6	9.1	0.15
6	4	0.98	1.96	1.18	2.16	4.9	36.3	17	0.23
8	4	1.96	2.94	1.47	2.55	5.9	44.1	18	0.4
10	4	3.92	7.84	2.84	4.9	15.7	98	50	0.62
13	4	5.88	10.8	3.53	5.78	19.6	138	55	1.1
16	6	31.4	34.3	7.06	12.6	67.6	393	165	1.6
20	6	56.9	55.9	10.2	17.8	118	700	225	2.5
25	6	105	103	15.2	25.8	210	1,140	335	3.9
30	6	171	148	20.5	34	290	1,710	375	5.6
40	6	419	377	37.8	60.5	687	3,760	1,000	9.9
50	6	842	769	60.9	94.5	1,340	7,350	1,950	15.5
60	6	1,220	1,040	73.5	111.7	1,600	9,990	2,500	22.3
80	6	2,310	1,920	104.9	154.8	2,510	16,000	4,680	39.6
100	6	3,730	3,010	136.2	195	3,400	24,000	9,550	61.8

[1] LT4 and 5 do not have a retainer. Do not remove the shaft from the spline nut. (It will cause balls to fall out.)
[2] $M_{A.1}$ indicates the permissible moment value in the axial direction when a single spline nut is used, as shown in the figure above.
[3] $M_{A.2}$ indicates the permissible moment value in the axial direction when two spline nuts in close contact with each other are used, as shown in the figure above.
Note: For details on the maximum lengths of ball spline shafts by accuracy, please see A3-123.

Options⇒A3-128

Model LF

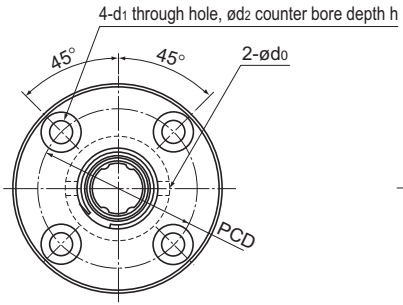

Models LF6 to 13

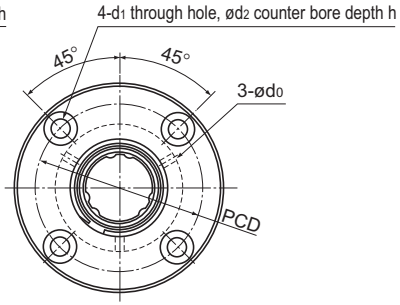

Models LF16 to 60

Model No.	Spline nut dimensions												
	Outer diameter		Length		Flange diameter		H	F	C	r	Lubrication hole	PCD	Mounting hole
	D	Tolerance	L	Tolerance	D_1	Tolerance					d_0		$d_1 \times d_2 \times h$
LF 6	14	0 −0.011	25	0 −0.2	30	0 −0.2	5	7.5	0.5	0.5	1.5	22	3.4×6.5×3.3
LF 8	16		25		32		5	7.5	0.5	0.5	1.5	24	3.4×6.5×3.3
LF 10	21	0 −0.013	33		42		6	10.5	0.5	0.5	1.5	32	4.5×8×4.4
LF 13	24		36		44		7	11	0.5	0.5	1.5	33	4.5×8×4.4
○ LF 16	31		50		51		7	18	0.5	0.5	2	40	4.5×8×4.4
○ LF 20	35	0 −0.016	63		58		9	22.5	0.5	0.5	2	45	5.5×9.5×5.4
○ LF 25	42		71	0 −0.3	65		9	26.5	0.5	0.5	3	52	5.5×9.5×5.4
○ LF 30	47		80		75		10	30	0.5	0.5	3	60	6.6×11×6.5
○ LF 40	64	0 −0.019	100		100		14	36	1	0.5	4	82	9×14×8.6
○ LF 50	80		125		124		16	46.5	1	1	4	102	11×17.5×11
○ LF 60	90	0 −0.022	140	0 −0.4	134		18	52	1	1	5	112	11×17.5×11

○: Indicates model numbers for which high temperature types are available (with metal retainer; service temperature: up to 100℃).

(Example) LF30 A CL+700L H
High temperature symbol

Model number coding

2 LF20 UU CM +400L P N

- 2: Number of spline nuts on one shaft (no symbol for one nuts)
- LF20: Model No.
- UU: Contamination protection accessory symbol [1]
- CM: Symbol for clearance in the rotational direction [2]
- +400L: Overall spline shaft length[5] (in mm)
- P: Accuracy symbol [3]
- N: Symbol for spline shaft[4]

[1] See A3-128. [2] See A3-32. [3] See A3-37. [4] See A3-95. [5] See A3-123.

Download data from the THK Online Services website. https://www.thk.com/

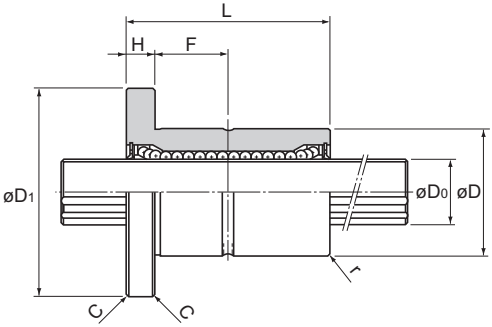

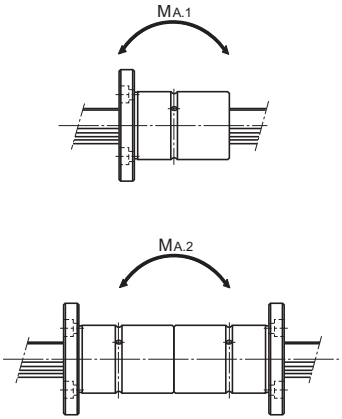

Unit: mm

	Spline shaft diameter	Rows of balls	Basic torque rating		Basic load rating		Static permissible moment		Mass	
	D_0 h7		C_T N·m	C_{0T} N·m	C kN	C_0 kN	$M_{A.1}$[1] N·m	$M_{A.2}$[2] N·m	Spline nut g	Spline shaft kg/m
	6	4	0.98	1.96	1.18	2.16	4.9	36.3	35	0.23
	8	4	1.96	2.94	1.47	2.55	5.9	44.1	37	0.4
	10	4	3.92	7.84	2.84	4.9	15.7	98	90	0.62
	13	4	5.88	10.8	3.53	5.78	19.6	138	110	1.1
	16	6	31.4	34.3	7.06	12.6	67.6	393	230	1.6
	20	6	56.9	55.9	10.2	17.8	118	700	330	2.5
	25	6	105	103	15.2	25.8	210	1,140	455	3.9
	30	6	171	148	20.5	34	290	1,710	565	5.6
	40	6	419	377	37.8	60.5	687	3,760	1,460	9.9
	50	6	842	769	60.9	94.5	1,340	7,350	2,760	15.5
	60	6	1220	1040	73.5	111.7	1,600	9,990	3,490	22.3

[1] $M_{A.1}$ indicates the permissible moment value in the axial direction when a single spline nut is used, as shown in the figure above.
[2] $M_{A.2}$ indicates the permissible moment value in the axial direction when two spline nuts in close contact with each other are used, as shown in the figure above.
Note: For details on the maximum lengths of ball spline shafts by accuracy, please see A3-123.

Model LT-X

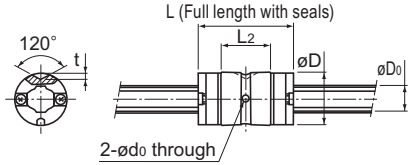

Model LT4X

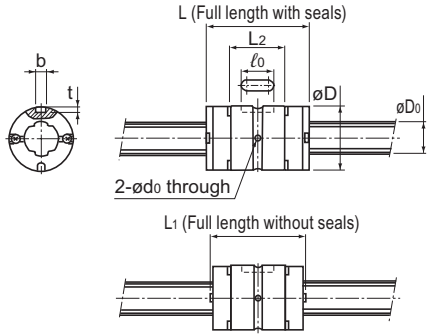

Models LT5X to 8X

Model No.	Spline shaft diameter	Spline nut dimensions								
		Outer diameter		Length			Keyway dimensions			Lubrication hole
	D_0 h7	D	Tolerance	L (With seals)	L_1 (Without seals)	L_2	b H8	t	ℓ_0	d_0
LT 4X	4	8	0 −0.009	14.4	12	7.5	—	1	—	1
LT 5X LT 5XL	5	10	0 −0.009	15 26	13.6 24.6	7.3 18.3	2	1.2	4.7	1
LT 6X LT 6XL	6	12	0 −0.011	19 30	17.6 28.6	10.2 21.2	2	1.2	6	1
LT 8X LT 8XL	8	15	0 −0.011	25 40	23.8 38.8	14.6 29.6	2.5	1.2	8	1.5
LT 10X	10	19	0 −0.013	33	30.8	23.9	3	1.5	13	1.5
LT 13X	13	23	0 −0.013	36	32.4	24	3	1.5	15	1.5
LT 16X	16	28	0 −0.013	50	46.4	35.5	3.5	2	17.5	2
LT 20X	20	32	0 −0.016	63	59	47.4	4	2.5	29	2
LT 25X	25	40	0 −0.016	71	67	52.6	4	2.5	36	3
LT 30X	30	45	0 −0.016	80	75.6	59.6	4	2.5	42	3

Model number coding

2 LT20X UU CL +700L P K

- 2: Number of spline nuts on one shaft (no symbol for one nut)
- LT20X: Model No.
- UU: Contamination protection accessory symbol [1]
- CL: Symbol for clearance in the rotational direction [2]
- +700L: Overall spline shaft length[5] (in mm)
- P: Accuracy symbol[3]
- K: Symbol for spline shaft[4]

[1] See A3-128. [2] See A3-32. [3] See A3-37. [4] See A3-95. [5] See A3-123.

Download data from the THK Online Services website. https://www.thk.com/

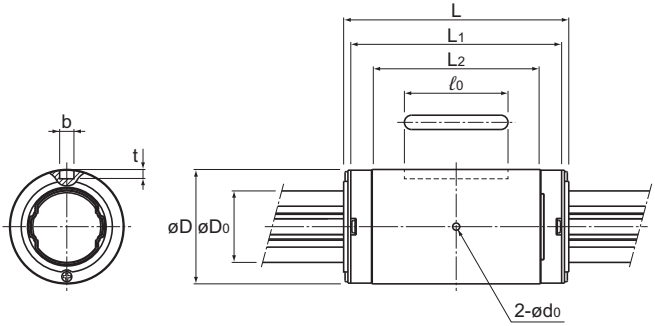

Models LT10X to 30X

Unit: mm

	Basic torque rating		Basic load rating		Static permissible moment			Mass	
	C_T N·m	C_{0T} N·m	C kN	C_0 kN	M_{A1} N·m	M_{A2} (With seal) N·m	M_{A2} (Without seal) N·m	Spline nut g	Spline shaft kg/m
	0.49	0.82	0.42	0.7	0.84	6.2	5	2.2	0.1
	0.82 1.59	1.25 3.2	0.56 1.09	0.85 2.19	1.04 6.11	8.2 35.5	6.6 28.4	3.3 8	0.15
	1.73 2.81	2.77 5.54	0.98 1.6	1.58 3.15	2.85 10.6	19 59.8	15.2 47.8	6.6 13.3	0.21
	6 10.1	9.23 19.5	1.39 2.35	2.15 4.53	5.13 21.1	34.3 110.9	27.4 88.7	14.3 24.3	0.38
	9.41	17.3	2.94	5.4	21.5	114	104	30	0.59
	17.1	28.7	4.16	6.96	28.9	164	149	40	1.01
	42.9	68.6	8.4	13.4	77.4	419	381	81	1.52
	66.4	117	10.5	18.6	144	735	669	130	2.41
	125	207	15.9	26.2	230	1,183	1,077	235	3.71
	196	319	20.8	34	335	1,714	1,560	295	5.37

Notes: The mass of the spline nut does not include the seal.
Please check the spline shaft strength tests (A3-12) before use.

Options⇒A3-128

Model LF-X

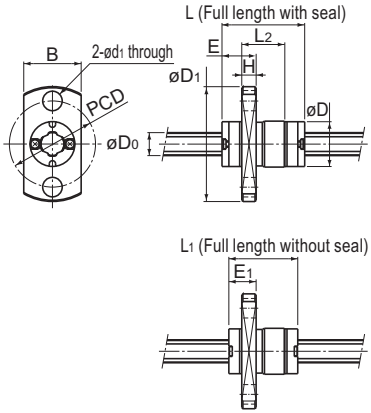

Model LF4X

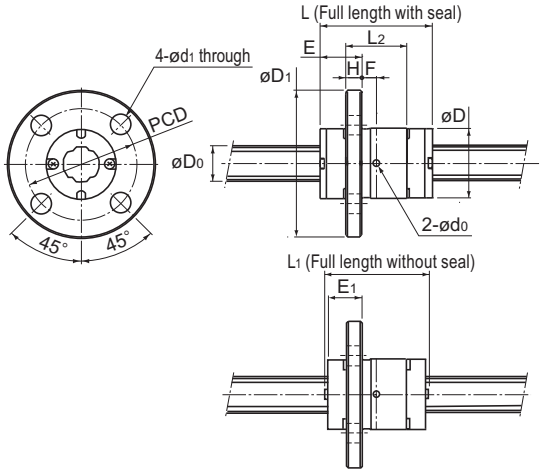

Models LF5X to 8X

Model No.	Spline shaft diameter	Spline nut dimensions												
		Outer diameter		Length			Flange outer diameter						Lubrication hole	
	D_0 h7	D	Tolerance	L (With seal)	L_1 (Without seal)	L_2	D_1	B	H	F	E	E_1	d_0	PCD
LF 4X	4	8	0 −0.009	14.4	12	7.5	20	10	2.5	—	5.95	4.75	—	15
LF 5X LF 5XL	5	10	0 −0.009	15 26	13.6 24.6	7.3 18.3	23	—	2.7	— 6.5	6.55	5.35	— 1	17
LF 6X LF 6XL	6	12	0 −0.011	19 30	17.6 28.6	10.2 21.2	25	—	2.7	2.4 7.9	7.1	5.9	1	19
LF 8X LF 8XL	8	15	0 −0.011	25 40	23.8 38.8	14.6 29.6	28	—	3.8	3.5 11	9	7.5	1.5	22
LF 10X	10	19	0 −0.013	33	30.8	23.9	38	—	6	5.95	10.55	9.45	1.5	28
LF 13X	13	23	0 −0.013	36	32.4	24	43	—	6	6	12	10.2	1.5	33
LF 16X	16	28	0 −0.013	50	46.4	35.5	48	—	6	11.7	13.3	11.5	2	38
LF 20X	20	32	0 −0.016	63	59	47.4	54	—	8	15.7	15.8	13.8	2	43
LF 25X	25	40	0 −0.016	71	67	52.6	62	—	8	18.3	17.2	15.2	3	51
LF 30X	30	45	0 −0.016	80	75.6	59.6	74	—	10	19.8	20.2	18	3	60

Model number coding

2 LF20X UU CL +700L P K

- 2: Number of spline nuts on one shaft (no symbol for one nut)
- LF20X: Model No.
- UU: Contamination protection accessory symbol [1]
- CL: Symbol for clearance in the rotational direction [2]
- +700L: Overall spline shaft length[5] (in mm)
- P: Accuracy symbol[3]
- K: Symbol for spline shaft[4]

[1] See A3-128. [2] See A3-32. [3] See A3-37. [4] See A3-95. [5] See A3-123.

Download data from the THK Online Services website. https://www.thk.com/

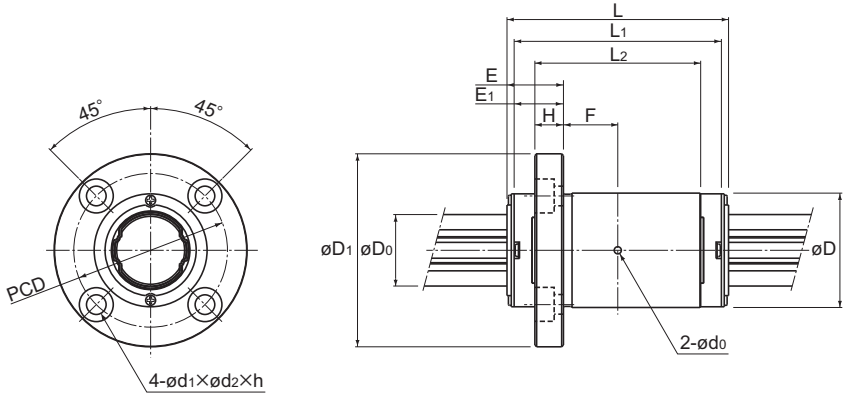

Models LF10X to 30X

Unit: mm

	Mounting hole	Basic torque rating		Basic load rating		Static permissible moment			Mass	
	$d_1 \times d_2 \times h$	C_T N·m	C_{0T} N·m	C kN	C_0 kN	M_{A1} N·m	M_{A2} (With seal) N·m	M_{A2} (Without seal) N·m	Spline nut g	Spline shaft kg/m
	3.4 through	0.49	0.82	0.42	0.7	0.84	6.2	5	4.7	0.1
	3.4 through	0.82 1.59	1.25 3.2	0.56 1.09	0.85 2.19	1.04 6.11	8.2 35.5	6.6 28.4	9.9 14.6	0.15
	3.4 through	1.73 2.81	2.77 5.54	0.98 1.6	1.58 3.15	2.85 10.6	19 59.8	15.2 47.8	13.8 20.5	0.21
	3.4 through	6 10.1	9.23 19.5	1.39 2.35	2.15 4.53	5.13 21.1	34.3 110.9	27.4 88.7	26.5 36.5	0.38
	4.5×8×4.4	9.41	17.3	2.94	5.4	21.5	114	104	66	0.59
	4.5×8×4.4	17.1	28.7	4.16	6.96	28.9	164	149	82	1.01
	4.5×8×4.4	42.9	68.6	8.4	13.4	77.4	419	381	131	1.52
	5.5×9.5×5.4	66.4	117	10.5	18.6	144	735	669	212	2.41
	5.5×9.5×5.4	125	207	15.9	26.2	230	1,183	1,077	335	3.71
	6.6×11×6.5	196	319	20.8	34	335	1,714	1,560	489	5.37

Notes: The mass of the spline nut does not include the seal.
Please check the spline shaft strength tests (A3-12) before use.

Options⇒A3-128

Model LFK-X

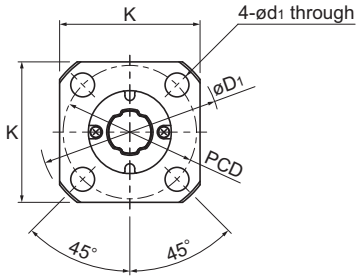

Models LFK5X to 8X

Model No.	Spline shaft diameter	Spline nut dimensions												
		Outer diameter		Length			Flange outer diameter						Lubrication hole	
	D_0 h7	D	Tolerance	L (With seal)	L_1 (Without seal)	L_2	D_1	K	H	F	E	E_1	d_0	PCD
LFK 5X LFK 5XL	5	10	0 −0.009	15 26	13.6 24.6	7.3 18.3	23	18	2.7	— 6.5	6.55	5.35	— 1	17
LFK 6X LFK 6XL	6	12	0 −0.011	19 30	17.6 28.6	10.2 21.2	25	20	2.7	2.4 7.9	7.1	5.9	1	19
LFK 8X LFK 8XL	8	15	0 −0.011	25 40	23.8 38.8	14.6 29.6	28	22	3.8	3.5 11	9	7.5	1.5	22
LFK 10X	10	19	0 −0.013	33	30.8	23.9	38	30	6	5.95	10.55	9.45	1.5	28
LFK 13X	13	23	0 −0.013	36	32.4	24	43	34	6	6	12	10.2	1.5	33
LFK 16X	16	28	0 −0.013	50	46.4	35.5	48	37	6	11.7	13.3	11.5	2	38
LFK 20X	20	32	0 −0.016	63	59	47.4	54	42	8	15.7	15.8	13.8	2	43
LFK 25X	25	40	0 −0.016	71	67	52.6	62	50	8	18.3	17.2	15.2	3	51
LFK 30X	30	45	0 −0.016	80	75.6	59.6	74	58	10	19.8	20.2	18	3	60

Model number coding

2 LFK20X UU CL +700L P K

- 2: Number of spline nuts on one shaft (no symbol for one nut)
- LFK20X: Model No.
- UU: Contamination protection accessory symbol [1]
- CL: Symbol for clearance in the rotational direction [2]
- +700L: Overall spline shaft length[5] (in mm)
- P: Accuracy symbol[3]
- K: Symbol for spline shaft[4]

[1] See A3-128. [2] See A3-32. [3] See A3-37. [4] See A3-95. [5] See A3-123.

Download data from the THK Online Services website. https://www.thk.com/

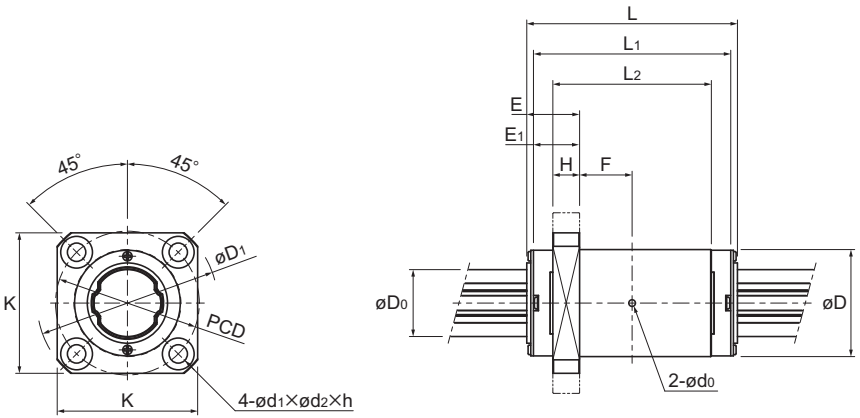

Models LFK10X to 30X

Unit: mm

	Mounting hole	Basic torque rating		Basic load rating		Static permissible moment			Mass	
	$d_1 \times d_2 \times h$	C_T N·m	C_{0T} N·m	C kN	C_0 kN	M_{A1} N·m	M_{A2} (With seal) N·m	M_{A2} (Without seal) N·m	Spline nut g	Spline shaft kg/m
	3.4 through	0.82 1.59	1.25 3.2	0.56 1.09	0.85 2.19	1.04 6.11	8.2 35.5	6.6 28.4	7.9 12.6	0.15
	3.4 through	1.73 2.81	2.77 5.54	0.98 1.6	1.58 3.15	2.85 10.6	19 59.8	15.2 47.8	11.6 18.3	0.21
	3.4 through	6 10.1	9.23 19.5	1.39 2.35	2.15 4.53	5.13 21.1	34.3 110.9	27.4 88.7	22.3 32.3	0.38
	4.5×8×4.4	9.41	17.3	2.94	5.4	21.5	114	104	54	0.59
	4.5×8×4.4	17.1	28.7	4.16	6.96	28.9	164	149	67	1.01
	4.5×8×4.4	42.9	68.6	8.4	13.4	77.4	419	381	110	1.52
	5.5×9.5×5.4	66.4	117	10.5	18.6	144	735	669	177	2.41
	5.5×9.5×5.4	125	207	15.9	26.2	230	1,183	1,077	298	3.71
	6.6×11×6.5	196	319	20.8	34	335	1,714	1,560	411	5.37

Notes: The mass of the spline nut does not include the seal.
Please check the spline shaft strength tests (A3-12) before use.

Options⇒A3-128

Model LFH-X

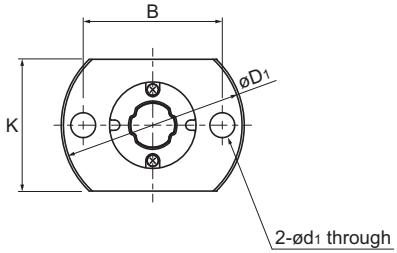

Models LFH5X to 13X

Model No.	Spline shaft diameter	Spline nut dimensions													
		Outer diameter		Length			Flange outer diameter								Lubrication hole
	D_0 h7	D	Tolerance	L (With seal)	L_1 (Without seal)	L_2	D_1	K	B	C	H	F	E	E_1	d_0
LFH 5X LFH 5XL	5	10	0 −0.009	15 26	13.6 24.6	7.3 18.3	23	16	17	—	2.7	— 6.5	6.55	5.35	— 1
LFH 6X LFH 6XL	6	12	0 −0.011	19 30	17.6 28.6	10.2 21.2	25	18	19	—	2.7	2.4 7.9	7.1	5.9	1
LFH 8X LFH 8XL	8	15	0 −0.011	25 40	23.8 38.8	14.6 29.6	28	21	22	—	3.8	3.5 11	9	7.5	1.5
LFH 10X	10	19	0 −0.013	33	30.8	23.9	38	25	29	—	6	5.95	10.55	9.45	1.5
LFH 13X	13	23	0 −0.013	36	32.4	24	43	29	33	—	6	6	12	10.2	1.5
LFH 16X	16	28	0 −0.013	50	46.4	35.5	48	34	31	22	6	11.7	13.3	11.5	2
LFH 20X	20	32	0 −0.016	63	59	47.4	54	38	36	24	8	15.7	15.8	13.8	2
LFH 25X	25	40	0 −0.016	71	67	52.6	62	46	40	32	8	18.3	17.2	15.2	3
LFH 30X	30	45	0 −0.016	80	75.6	59.6	74	51	49	35	10	19.8	20.2	18	3

Model number coding

2 LFH20X UU CL +700L P K

- 2: Number of spline nuts on one shaft (no symbol for one nut)
- LFH20X: Model No.
- UU: Contamination protection accessory symbol [1]
- CL: Symbol for clearance in the rotational direction [2]
- +700L: Overall spline shaft length[5] (in mm)
- P: Accuracy symbol[3]
- K: Symbol for spline shaft[4]

[1] See A3-128. [2] See A3-32. [3] See A3-37. [4] See A3-95. [5] See A3-123.

Download data from the THK Online Services website. https://www.thk.com/

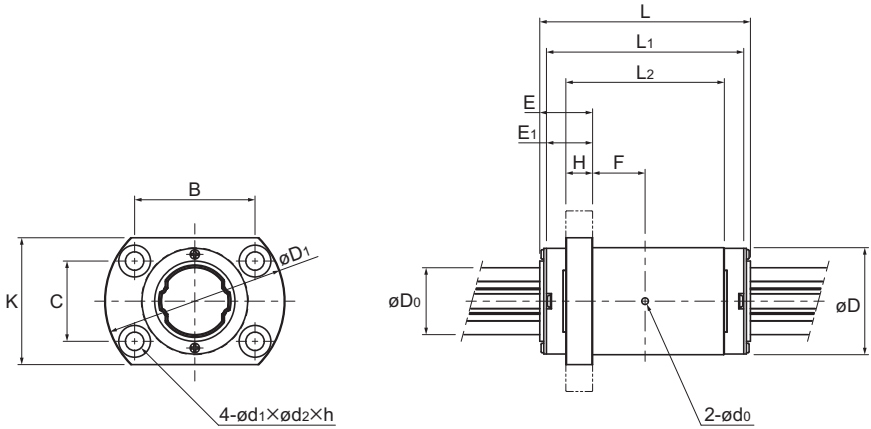

Models LFH16X to 30X

Unit: mm

	Mounting hole	Basic torque rating		Basic load rating		Static permissible moment			Mass	
	$d_1 \times d_2 \times h$	C_T N·m	C_{0T} N·m	C kN	C_0 kN	M_{A1} N·m	M_{A2} (With seal) N·m	M_{A2} (Without seal) N·m	Spline nut g	Spline shaft kg/m
	3.4 through	0.82 1.59	1.25 3.2	0.56 1.09	0.85 2.19	1.04 6.11	8.2 35.5	6.6 28.4	8.6 13.3	0.15
	3.4 through	1.73 2.81	2.77 5.54	0.98 1.6	1.58 3.15	2.85 10.6	19 59.8	15.2 47.8	12.4 19.1	0.21
	3.4 through	6 10.1	9.23 19.5	1.39 2.35	2.15 4.53	5.13 21.1	34.3 110.9	27.4 88.7	24.4 34.4	0.38
	4.5 through	9.41	17.3	2.94	5.4	21.5	114	104	59	0.59
	4.5 through	17.1	28.7	4.16	6.96	28.9	164	149	71	1.01
	4.5×8×4.4	42.9	68.6	8.4	13.4	77.4	419	381	116	1.52
	5.5×9.5×5.4	66.4	117	10.5	18.6	144	735	669	186	2.41
	5.5×9.5×5.4	125	207	15.9	26.2	230	1,183	1,077	306	3.71
	6.6×11×6.5	196	319	20.8	34	335	1,714	1,560	422	5.37

Notes: The mass of the spline nut does not include the seal.
Please check the spline shaft strength tests (A3-12) before use.

Options⇒A3-128

Model LT with Recommended Shaft End Shape

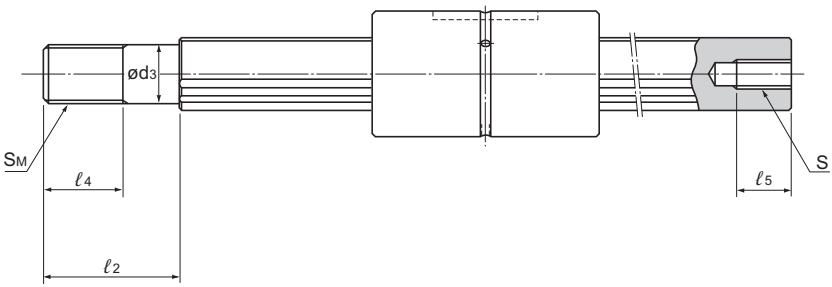

Unit: mm

Model No.	d_3	Tolerance	ℓ_2	S_M	ℓ_4	$S \times \ell_5$
LT 6	5	0 –0.012	12	M5×0.8	7	M2.5×4
LT 8	6		14	M6×1	8	M3×5
LT 10	8	0 –0.015	18	M8×1	11	M4×6
LT 13	10		23	M10×1.25	14	M5×8
LT 16	14	0 –0.018	30	M14×1.5	18	M6×10
LT 20	16		38	M16×1.5	22	M8×15
LT 25	22	0 –0.021	50	M22×1.5	28	M10×18
LT 30	27		60	M27×2	34	M14×25
LT 40	36	0 –0.025	80	M36×3	45	M18×30
LT 50	45		100	M45×4.5	58	M22×40

Download data from the THK Online Services website. https://www.thk.com/

Spline Shaft

Spline shafts are divided by shape into precision solid spline shafts, special spline shafts, and hollow spline shafts (types K and N), as described on A3-81.
Since production of a spline shaft with a specific shape is performed at your request, provide a drawing of the desired shaft shape when requesting an estimate or placing an order.

Cross-Sectional Shape of the Spline Shaft

Table 2 shows the cross-sectional shape of a spline shaft. If the spline shaft ends need to be cylindrical, the minor diameter (ød) value should not be exceeded if possible.

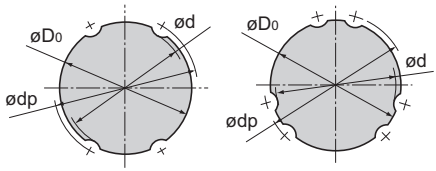

Model LT13 or smaller Model LT16 or greater

Table 2: Cross-Sectional Shape of the Spline Shaft for Models LT and LF

Unit: mm

Nominal shaft diameter	4	5	6	8	10	13	16	20	25	30	40	50	60	80	100
Minor diameter ød	3.5	4.5	5	7	8.5	11.5	14.5	18.5	23	28	37.5	46.5	56.5	75.5	95
Major diameter $øD_0$ h7	4	5	6	8	10	13	16	20	25	30	40	50	60	80	100
Ball center-to-center diameter ødp	4.6	5.7	7	9.3	11.5	14.8	17.8	22.1	27.6	33.2	44.2	55.2	66.3	87.9	109.5
Mass (kg/m)	0.1	0.15	0.23	0.4	0.62	1.1	1.6	2.5	3.9	5.6	9.9	15.5	22.3	39.6	61.8

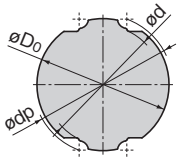

Table 3: Cross-Sectional Shape of the Spline Shaft for Models LT-X, LF-X, LFK-X, and LFH-X

Unit: mm

Nominal shaft diameter	4	5	6	8	10	13	16	20	25	30
Minor diameter ød	3.6	4.5	5.4	7	8.6	11.3	13.9	17.9	22.4	27
Major diameter $øD_0$	4	5	6	8	10	13	16	20	25	30
Ball center-to-center diameter ødp	4.4	5.5	6.6	8.6	10.7	13.8	17.1	21.1	26.4	31.6
Mass (g/m)	100	150	210	380	590	1,010	1,520	2,410	3,710	5,370

Hole Shape of the Standard Hollow Spline Shaft

Shows the hole shape of the standard hollow spline.
Use this table when a requirement such as piping, wiring, air ventilation, or weight reduction needs to be met.

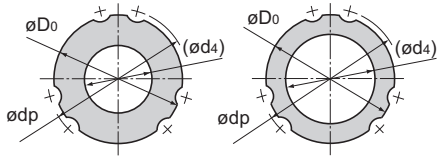

Type K (Thick) Type N (Thin)

Table 4: Cross-Sectional Shape of the Standard Hollow Spline Shaft for Models LT and LF

Unit: mm

Nominal shaft diameter		6	8	10	13	16	20	25	30	40	50	60	80	100
Major diameter $øD_0$ h7		6	8	10	13	16	20	25	30	40	50	60	80	100
Ball center-to-center diameter ødp		7	9.3	11.5	14.8	17.8	22.1	27.6	33.2	44.2	55.2	66.3	87.9	109.5
Type K	Hole diameter ($ød_4$)	2.5	3	4	5	7	10	12	16	22	25	32	52.5	67.5
	Mass (kg/m)	0.2	0.35	0.52	0.95	1.3	1.8	3	4	6.9	11.6	16	22.6	33.7
Type N	Hole diameter ($ød_4$)	—	—	—	—	11	14	18	21	29	36	—	—	—
	Mass (kg/m)	—	—	—	—	0.8	1.3	1.9	2.8	4.7	7.4	—	—	—

Note: The standard hollow spline shaft is divided into types K and N. Indicate “K” or “N” at the end of the model number to distinguish between them when placing an order.

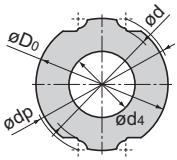

Type K (Thick)

Table 5: Cross-Sectional Shape of the Hollow Spline Shaft for Models LT-X, LF-X, LFK-X, and LFH-X (K Type)

Unit: mm

Nominal shaft diameter	4	5	6	8	10	13	16	20	25	30
Minor diameter ød	—	—	5.4	7	8.6	11.3	13.9	17.9	22.4	27
Major diameter $øD_0$	—	—	6	8	10	13	16	20	25	30
Ball center-to-center diameter ødp	—	—	6.6	8.6	10.7	13.8	17.1	21.1	26.4	31.6
Hole diameter $ød_4$	—	—	2.5	3	4	5	7	10	12	16
Mass (g/m)	—	—	180	300	490	850	1,220	1,790	2,820	3,780

Note: The hollow spline shaft (K type) for models LT6X, LF6X, LFK6X, and LFH6X is made of carbon steel.

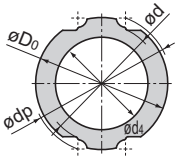

Type N (Thin)

Table 6: Cross-Sectional Shape of the Hollow Spline Shaft for Models LT-X, LF-X, LFK-X, and LFH-X (N Type)

Unit: mm

Nominal shaft diameter	4	5	6	8	10	13	16	20	25	30
Minor diameter ød	—	—	—	—	—	—	13.9	17.9	22.4	27
Major diameter $øD_0$	—	—	—	—	—	—	16	20	25	30
Ball center-to-center diameter ødp	—	—	—	—	—	—	17.1	21.1	26.4	31.6
Hole diameter $ød_4$	—	—	—	—	—	—	11	14	18	21
Mass (g/m)	—	—	—	—	—	—	770	1,190	1,700	2,630

Chamfering of the Spline Shaft Ends

To facilitate the insertion of the spline shaft into a spline nut, the shaft ends are normally chamfered with the dimensions indicated below unless otherwise specified.
The ends are chamfered whether they are used, such as with stepped, tapped, or drilled ends, or not used, such as with cantilevered supports.

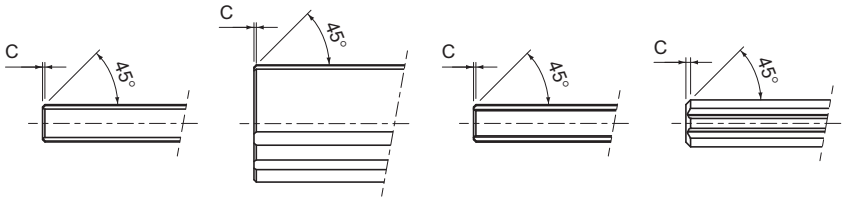

Models LT/LF4 to 13 | Models LT/LF16 to 100 | Models LT/LF4X to 8X | Models LT/LF10X to 30X

Table 7: Chamfer Dimensions of Model LT and Model LF Spline Shaft Ends

Unit: mm

Nominal shaft diameter	4	5	6	8	10	13	16	20	25	30	32	40	50	60	80	100
Chamfer C	0.3	0.3	0.5	0.5	0.5	0.5	0.5	0.5	0.5	0.5	0.5	1	1	2	2	2

Table 8: Chamfer Dimensions of Models LT-X, LF-X, LFK-X, and LFH-X Spline Shaft Ends

Unit: mm

Nominal shaft diameter	4	5	6	8	10	13	16	20	25	30
Chamfer C	0.3	0.3	0.5	0.5	1.5	1.5	1.5	1.5	2	2

Length of the Incompletely Ground Area of a Special Spline Shaft

If any part of the spline shaft is thicker than the minor diameter (ød), incompletely ground spline grooves with rounded inside corners will be left by the grinding process. The relationship between the flange diameter (ødf) and the length of incomplete splines (S) is shown in Table 9.
(This table does not apply to overall lengths of 1,500 mm or greater. Contact THK for details.)

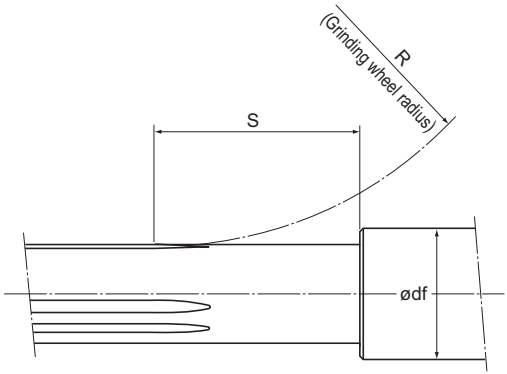

Table 9: Length of Incomplete Spline Area: S Miniature type

Unit: mm

Flange diameter ødf / Nominal shaft diameter	4	5	6	8	10
4	23	25	27	31	—
5	—	24	26	29	33

Standard Type

Unit: mm

Flange diameter ødf / Nominal shaft diameter	6	8	10	13	16	20	25	30	40	50	60	80	100	120	140	160
6	24	28	31	39	—	—	—	—	—	—	—	—	—	—	—	—
8	—	25	29	35	41	—	—	—	—	—	—	—	—	—	—	—
10	—	—	26	31	38	45	—	—	—	—	—	—	—	—	—	—
13	—	—	—	33	39	46	56	—	—	—	—	—	—	—	—	—
16	—	—	—	—	36	47	58	67	—	—	—	—	—	—	—	—
20	—	—	—	—	—	37	50	60	76	—	—	—	—	—	—	—
25	—	—	—	—	—	—	38	51	72	88	—	—	—	—	—	—
30	—	—	—	—	—	—	—	40	62	80	95	—	—	—	—	—
40	—	—	—	—	—	—	—	—	42	63	81	107	—	—	—	—
50	—	—	—	—	—	—	—	—	—	45	65	96	118	—	—	—
60	—	—	—	—	—	—	—	—	—	—	50	87	114	134	—	—
80	—	—	—	—	—	—	—	—	—	—	—	53	89	115	135	—
100	—	—	—	—	—	—	—	—	—	—	—	—	57	90	116	136

Note: This table does not apply to overall lengths of 1,500 mm or greater. Contact THK for details.

Compact Type

Unit: mm

Flange diameter ødf / Nominal shaft diameter	4	5	6	8	10	13	16	20	25	30	35	40	50	60
4X	23	25	27	31	—	—	—	—	—	—	—	—	—	—
5X	—	24	26	29	33	—	—	—	—	—	—	—	—	—
6X	—	—	24	28	31	39	—	—	—	—	—	—	—	—
8X	—	—	—	25	29	35	41	—	—	—	—	—	—	—
10X	—	—	—	—	26	40	48	56	—	—	—	—	—	—
13X	—	—	—	—	—	33	41	51	61	—	—	—	—	—
16X	—	—	—	—	—	—	36	47	58	67	—	—	—	—
20X	—	—	—	—	—	—	—	37	50	60	67	76	—	—
25X	—	—	—	—	—	—	—	—	38	51	59	72	88	—
30X	—	—	—	—	—	—	—	—	—	40	50	62	80	95

Accessories

Ball Spline Model LT is provided with a standard key as indicated in Table 10.

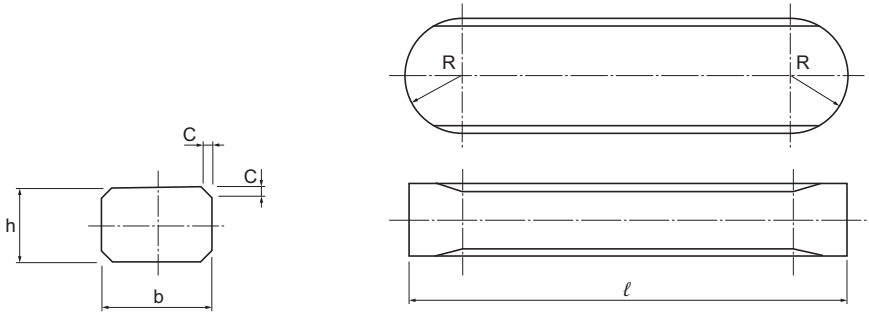

Table 10: Standard Key for Model LT

Unit: mm

Nominal shaft diameter	Width		Height		Length		R	C
	b	Tolerance (p7)	h	Tolerance (h9)	ℓ	Tolerance (h12)		
LT 4	2	+0.016 +0.006	2	0 −0.025	6	0 −0.120	1	0.3
LT 5	2.5		2.5		8	0 −0.150	1.25	0.5
LT 5X	2		2		4.7	0 −0.120	1	0.2
LT 5XL	2		2		4.7		1	
LT 6	2.5		2.5		10.5	0 −0.180	1.25	0.5
LT 6X	2		2		6	0 −0.120	1	0.3
LT 6XL	2		2		6		1	
LT 8	2.5		2.5		10.5	0 −0.180	1.25	0.5
LT 8X	2.5		2.5		8	0 −0.150	1.25	
LT 8XL	2.5		2.5		8		1.25	
LT 10	3		3		13	0 −0.180	1.5	
LT 10X	3		3		13		1.5	
LT 13	3		3		15		1.5	
LT 13X	3		3		15		1.5	
LT 16	3.5	+0.024 +0.012	3.5	0 −0.030	17.5		1.75	
LT 16X	3.5		3.5		17.5		1.75	
LT 20	4		4		29	0 −0.210	2	
LT 20X	4		4		29		2	
LT 25	4		4		36	0 −0.250	2	
LT 25X	4		4		36		2	
LT 30	4		4		42		2	
LT 30X	4		4		42		2	
LT 40	6		6		52	0 −0.300	3	
LT 50	8	+0.030 +0.015	7	0 −0.036	58		4	
LT 60	12	+0.036 +0.018	8		67		6	0.8
LT 80	16		10		76		8	
LT 100	20	+0.043 +0.022	13	0 −0.043	110	0 −0.350	10	