Positioning Ball Screw

Series	Type		Features	
Positioning	SBN-V	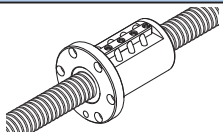	Caged Ball, Single nut, high DN value	
	SBK	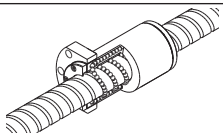	High DN value, large lead	
	BIF-V	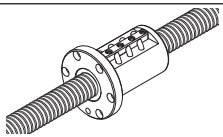	Single nut, high DN value	
	BNFN-V	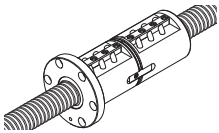	Double nut, high DN value	
	BNFN		Double nut, large	
	DIK	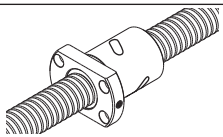	Compact nut, preload	
	DKN	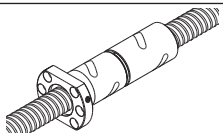	Compact nut	
	BLW	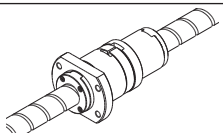	Large lead	
	BNK Standardized finished shaft end	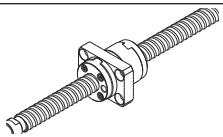	Standard to Super Lead	

	Caged ball	Compact nut	Miniature	High load capacity	Offset Preload	Double-nut Preload	DN Value	Shaft diameter (mm)	Lead (mm)	Page No.
	✓				✓		130000	16 to 32	4 to 10	A15-110
							160000	25 to 50	8 to 20	A15-112
	✓				✓		210000	36 to 50	36 to 50	A15-114
							160000	15 to 55	10 to 36	A15-116
					✓		100000	16 to 32	4 to 6	A15-118
							130000	25 to 50	8 to 20	A15-120
				✓		✓	100000	16 to 32	5 to 6	A15-124
							130000	28 to 50	10 to 16	A15-124
						✓	70000	55 to 100	10 to 20	A15-126
		✓			✓		70000	14 to 63	4 to 16	A15-130
		✓		✓		✓	70000	40 to 63	20	A15-136
						✓	70000	15 to 50	10 to 50	A15-138
					✓		70000	4 to 25	1 to 20	A15-140

Positioning Ball Screw

Series	Type		Features	
Positioning	MDK Unfinished Shaft Ends	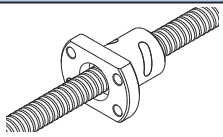	Compact nut, miniature	
	MDK			
	MBF Unfinished Shaft Ends	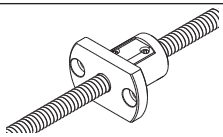	Miniature	
	MBF			
	BNF-V	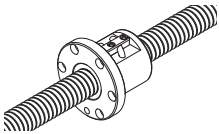	Single nut, high DN value	
	BNF		Single nut, large	
	DK	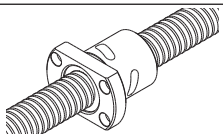	Compact nut, no preload	
	WHF	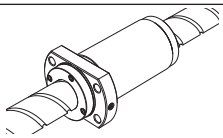	Super large lead,high DN value	
	BLK	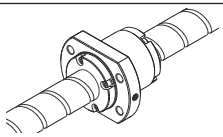	Large lead	
	WGF	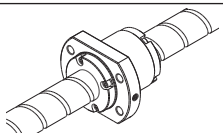	Super large lead	
	BNT	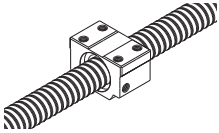	Flat nut	

	Caged ball	Compact nut	Miniature	High load capacity	Offset Preload	DN Value	Shaft diameter (mm)	Lead (mm)	Page No.
		✓	✓			70000	4 to 14	1 to 5	A15-182
									A15-186
			✓			70000	4 to 14	1 to 4	A15-188
								1 to 5	A15-190
						100000	16 to 32	4 to 6	A15-192
						130000	25 to 50	8 to 20	A15-194
						70000	55 to 100	10 to 20	A15-198
		✓				70000	14 to 63	4 to 20	A15-202
						120000	15 to 25	20 to 50	A15-210
						70000	8 to 50	8 to 50	A15-212
						70000	8 to 50	12 to 100	A15-214
						70000	14 to 45	4 to 12	A15-216

Standard combinations of outer diameters and leads of the screw shafts

Shaft diameter	Lead											
	1	2	3	4	5	6	8	10	12	15	16	
4	BNK MBF MDK											
5	BNK											
6	BNK MBF MDK	MBF										
8	BNK MDK	BNK MBF MDK	MBF	MBF			BLK	BNK	WGF			
10	MBF	BNK MBF MDK	MBF	BNK	MBF			BNK		WGF		
12		BNK MBF MDK	MBF	MBF	BNK		BNK					
13												
14		BNK MBF MDK		BNK DIK MBF MDK DK BNT	MDK BNT		BNK					
15								BNK BLW BLK				
16				SBN-V BIF-V BNF-V	SBN-V BIF-V BNFN-V DIK BNF-V DK BNT						SBK BNK BLW BLK	
18							BNT					
20				SBN-V BIF-V DIK BNF-V DK	SBN-V BIF-V DIK BNF-V DK BNT	DIK DK	DIK DK	SBN-V SBK BIF-V BNK BNF-V BNT				
25				SBN-V BIF-V DIK BNF-V DK	SBN-V BIF-V DIK BNF-V DK BNT	SBN-V BIF-V DIK BNF-V DK	SBN-V BIF-V DIK BNF-V DK	SBN-V BIF-V DIK BNF-V DK BNT				
28					SBN-V BIF-V BNFN-V DIK BNF-V DK	BIF-V BNFN-V DIK BNF-V DK BNT		SBN-V BIF-V BNFN-V DIK BNF-V DK				

Unit: mm

Lead											
20	24	25	30	32	36	40	50	60	80	90	100
WGF											
SBK BNK WGF			WGF WHF			WGF WHF					
SBK BNK BLW BLK WHF		WHF	SBK WHF			WGF WHF		WGF			
SBK BNK		SBK BLW BLK WHF					WGF WHF				

Standard combinations of outer diameters and leads of the screw shafts

Shaft diameter	Lead										
	1	2	4	5	6	8	10	12	15	16	
30											
32			DIK DK	SBN-V BIF-V BNFN-V DIK BNF-V DK	SBN-V BIF-V DIK BNF-V DK		SBN-V BIF-V DIK BNF-V DK BNT	SBN-V BIF-V DIK BNF-V DK		SBN-V BIF-V BNF-V	
36							SBN-V BIF-V BNFN-V DIK BNF-V BNT	SBN-V BIF-V BNF-V DK		SBN-V BIF-V BNFN-V BNF-V	
40							SBN-V BIF-V DIK BNF-V DK	SBN-V BIF-V DIK BNF-V DK		SBN-V BIF-V BNFN-V DIK BNF-V DK	
45							SBN-V BIF-V BNFN-V BNF-V	SBN-V BIF-V BNF-V BNT		SBN-V BIF-V	
50							SBN-V BIF-V BNFN-V DIK BNF-V DK	SBN-V BIF-V DIK BNF-V DK		SBN-V BIF-V DIK BNF-V DK	
55							BNFN BNF	BNFN BNF		BNFN BNF	
63							BNFN DIK BNF DK	BNFN DIK BNF DK		BNFN BNF	
70							BNFN BNF	BNFN BNF			
80							BNFN BNF	BNFN			
100											

Unit: mm

Lead											
20	24	25	30	32	36	40	50	60	80	90	100
								WGF		WGF	
SBK				SBK BLW BLK							
SBN-V SBK BIF-V BNF-V BLK	BLK				SBK BLW BLK						
SBN-V SBK BIF-V DKN BNF-V DK			SBK			SBK BLW BLK			WGF		
SBN-V BIF-V BNF-V											
SBN-V SBK BIF-V DKN BNF-V DK			SBK		SBK		SBK BLW BLK				WGF
SBK BNFN BNF			SBK		SBK						
BNFN DKN BNF DK											
BNFN BNF											
BNFN BNF											
BNFN BNF											

SBN-V Small With Preload

DN value	130000

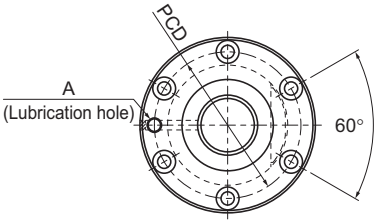

Model No.	Screw shaft outer diameter	Lead	Ball center-to-center diameter	Thread minor diameter	No. of loaded circuits	Basic load rating		Rigidity
						Ca	C_0a	K
	d	Ph	dp	dc	Rows × turns	kN	kN	N/μm
SBN 1604V-5	16	4	16.5	13.8	1×2.5	5.3	8	281
SBN 1605V-5	16	5	16.75	13.2	1×2.5	9.2	12.9	309
SBN 2004V-5	20	4	20.5	17.8	1×2.5	5.9	10.1	335
SBN 2005V-5	20	5	20.75	17.2	1×2.5	10.3	16.2	370
SBN 2010V-5	20	10	20.75	17.2	1×2.5	10.2	16.4	362
SBN 2504V-5	25	4	25.5	22.8	1×2.5	6.4	12.7	400
SBN 2505V-5	25	5	25.75	22.2	1×2.5	11.3	20.3	442
SBN 2506V-5	25	6	26	21.4	1×2.5	15.4	25.4	457
SBN 2805V-5	28	5	28.75	25.2	1×2.5	11.8	22.8	483
SBN 3205V-5	32	5	32.75	29.2	1×2.5	12.6	26.1	536
SBN 3206V-5	32	6	33	28.4	1×2.5	17.2	32.7	555

Model number coding

SBN1604V-5 QZ RR G0 +1200L C5

- SBN1604V-5: Model No.
- QZ: With QZ lubricator (No code without QZ lubricator)
- RR: Contamination protection accessory symbol (*1)
- G0: Symbol for Clearance in the axial direction (G0 for all SBN-V variations)
- +1200L: Overall screw shaft length (in mm)
- C5: Accuracy symbol (*2)

(*1) See A15-334. (*2) See A15-12.

Download data by searching for the corresponding model number on the Technical Support site. https://tech.thk.com

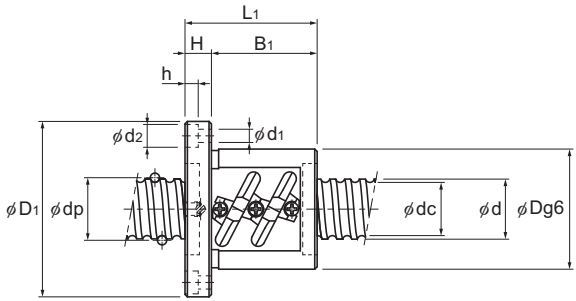

Unit: mm

	Nut dimensions								Screw shaft inertial moment/mm	Nut mass	Shaft mass	Permissible rotational speed
	Outer diameter Dg6	Flange diameter D_1	Overall length L_1	H	B_1	PCD	$d_1 \times d_2 \times h$	Lubrication hole A	$kg \cdot m^2/mm$	kg	kg/m	min^{-1}
	36	59	53	11	42	47	5.5×9.5×5.5	M6	5.05×10^{-8}	0.42	1.42	5000
	40	60	56	10	46	50	4.5×8×4.5	M6	5.05×10^{-8}	0.5	1.37	5000
	40	63	49	11	38	51	5.5×9.5×5.5	M6	1.23×10^{-7}	0.43	2.22	5000
	44	67	56	11	45	55	5.5×9.5×5.5	M6	1.23×10^{-7}	0.61	2.6	5000
	46	74	90	15	75	59	5.5×9.5×5.5	M6	1.23×10^{-7}	1.06	2.33	5000
	46	69	48	11	37	57	5.5×9.5×5.5	M6	3.01×10^{-7}	0.55	3.6	5000
	50	73	55	11	44	61	5.5×9.5×5.5	M6	3.01×10^{-7}	0.72	3.52	5000
	53	76	62	11	51	64	5.5×9.5×5.5	M6	3.01×10^{-7}	0.9	3.43	5000
	55	85	59	12	47	69	6.6×11×6.5	M6	4.74×10^{-7}	0.98	4.45	4520
	58	85	56	12	44	71	6.6×11×6.5	M6	8.08×10^{-7}	0.96	5.88	3960
	62	89	63	12	51	75	6.6×11×6.5	M6	8.08×10^{-7}	1.22	5.89	3930

Axial Clearance

Unit: mm

Clearance symbol	G0
Axial Clearance	0 or less

Note)The overall length of the nut will increase when equipping the QZ lubricating device. See A15-344 for further details.
It is not possible to chamfer both ends of the screw shaft. When designing your system this way, contact THK.

The rigidity values in the table represent spring constants, each obtained from the load and the elastic deformation when providing a preload equal to 10% of the basic axial dynamic load rating (Ca) and applying an axial load three times greater than the pre-load. These values do not include the rigidity of the components related to mounting the ball screw nut. Therefore, it is normally appropriate to regard roughly 80% of the value in the table as the actual value.
If the applied preload (Fa_0) is not 0.1 Ca, the rigidity value (K_N) is obtained from the following equation.

$$K_N = K \left(\frac{Fa_0}{0.1Ca} \right)^{\frac{1}{3}}$$

K: Rigidity value in the dimensional table

Options⇒A15-333

SBN-V Medium With Preload

DN value	160000

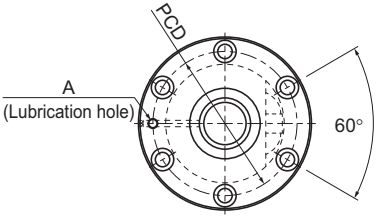

Model No.	Screw shaft outer diameter	Lead	Ball center-to-center diameter	Thread minor diameter	No. of loaded circuits	Basic load rating		Rigidity
						Ca	C_0a	K
	d	Ph	dp	dc	Rows × turns	kN	kN	N/μm
SBN 2508V-7	25	8	26.25	20.5	1×3.5	26.2	43	650
SBN 2510V-5	25	10	26.25	21.5	1×2.5	19.6	30.9	474
SBN 2810V-3	28	10	29.75	22.4	1×1.5	19.5	27.8	332
SBN 3210V-7	32	10	33.75	26.4	1×3.5	43	73.1	836.7
SBN 3212V-5	32	12	34	26.1	1×2.5	37.4	58.7	612.2
SBN 3216V-5	32	16	33.75	26.4	1×2.5	31.9	52.2	592
SBN 3610V-7	36	10	37.75	30.4	1×3.5	45.6	82.3	900
SBN 3612V-7	36	12	38	30.1	1×3.5	53.2	92.6	920
SBN 3616V-5	36	16	38	30.1	1×2.5	39.7	66.4	662
SBN 3620V-3	36	20	37.75	30.5	1×1.5	21.6	32.9	398
SBN 4010V-5	40	10	41.75	34.4	1×2.5	35.8	65.2	708
SBN 4012V-5	40	12	42	34.1	1×2.5	42	73.6	735.4
SBN 4016V-5	40	16	42	34.1	1×2.5	41.9	73.8	736.6
SBN 4020V-5	40	20	41.75	34.4	1×2.5	35.4	65.2	706
SBN 4510V-5	45	10	46.75	39.5	1×2.5	37.9	73.8	780
SBN 4512V-5	45	12	47	39.2	1×2.5	44.4	82.9	809.1
SBN 4516V-5	45	16	47	39.2	1×2.5	44.3	83.1	810.1
SBN 4520V-5	45	20	47	39.2	1×2.5	43.9	82.5	788
SBN 5010V-5	50	10	51.75	44.4	1×2.5	39.4	81	838
SBN 5012V-5	50	12	52.25	43.3	1×2.5	53.6	101.9	936
SBN 5016V-5	50	16	52.7	42.9	1×2.5	89	167.7	1228
SBN 5020V-5	50	20	52.7	42.9	1×2.5	88.7	167.7	1228

Model number coding

SBN4012V-5 QZ RR G0 +1200L C5

- SBN4012V-5: Model No.
- QZ: Contamination protection accessory symbol (*1)
  - With QZ lubricator (No code without QZ lubricator)
- RR: Symbol for Clearance in the axial direction (G0 for all SBN-V variations)
- G0: Symbol for Clearance in the axial direction (G0 for all SBN-V variations)
- +1200L: Overall screw shaft length (in mm)
- C5: Accuracy symbol (*2)

(*1) See A15-334. (*2) See A15-12.

Download data by searching for the corresponding model number on the Technical Support site. https://tech.thk.com

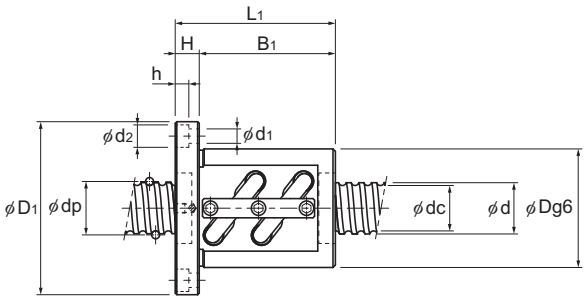

Unit: mm

	Nut dimensions								Screw shaft inertial moment/mm	Nut mass	Shaft mass	Permissible rotational speed
	Outer diameter Dg6	Flange diameter D_1	Overall length L_1	H	B_1	PCD	$d_1 \times d_2 \times h$	Lubrication hole A	$kg \cdot m^2/mm$	kg	kg/m	min^{-1}
	58	85	98	15	83	71	6.6×11×6.5	M6	3.01×10^{-7}	1.5	3.51	5000
	58	85	100	18	82	71	6.6×11×6.5	M6	3.01×10^{-7}	1.31	3.5	5000
	65	106	88	18	70	85	11×17.5×11	M6	4.74×10^{-7}	2.41	4.15	5000
	74	108	120	15	105	90	9×14×8.5	M6	8.08×10^{-7}	3.1	5.53	4740
	76	121	117	18	99	98	11×17.5×11	M6	8.08×10^{-7}	3.7	5.7	4700
	74	108	139	18	121	90	9×14×8.5	M6	8.08×10^{-7}	3.81	5.82	4740
	75	120	123	18	105	98	11×17.5×11	M6	1.29×10^{-6}	3.82	7.1	4230
	78	123	140	18	122	100	11×17.5×11	M6	1.29×10^{-6}	4.34	7.99	4210
	78	123	140	18	122	100	11×17.5×11	M6	1.29×10^{-6}	4.31	7.99	4210
	75	114	122	18	104	93	11×17.5×11	M6	1.29×10^{-6}	3.4	7.54	4230
	82	124	103	18	85	102	11×17.5×11	M6	1.97×10^{-6}	3.61	8.87	3830
	84	126	119	18	101	104	11×17.5×11	M6	1.97×10^{-6}	4.2	8.83	3800
	84	126	144	18	126	104	11×17.5×11	M6	1.97×10^{-6}	4.9	9.09	3800
	82	126	162	18	144	104	11×17.5×11	M6	1.97×10^{-6}	5.17	9.37	3830
	88	132	111	18	93	110	11×17.5×11	Rc1/8 (PT1/8)	3.16×10^{-6}	4.29	11.36	3420
	90	130	119	18	101	110	11×17.5×11		3.16×10^{-6}	4.6	11.32	3400
	90	130	140	18	122	110	11×17.5×11		3.16×10^{-6}	5.3	11.61	3400
	90	130	162	18	144	110	11×17.5×11		3.16×10^{-6}	5.96	11.1	3400
	93	135	103	18	85	113	11×17.5×11		4.82×10^{-6}	4.28	14.16	3090
	100	146	123	22	101	122	14×20×13		4.82×10^{-6}	6.12	13.82	3060
	105	152	164	25	139	128	14×20×13		4.82×10^{-6}	8.82	13.71	3030
	105	152	201	28	173	128	14×20×13		4.82×10^{-6}	10.63	14.05	3030

Axial Clearance

Unit: mm

Clearance symbol	G0
Axial Clearance	0 or less

Note)The overall length of the nut will increase when equipping the QZ lubricating device. See A15-344 for further details.
It is not possible to chamfer both ends of the screw shaft. When designing your system this way, contact THK.

The rigidity values in the table represent spring constants, each obtained from the load and the elastic deformation when providing a preload equal to 10% of the basic axial dynamic load rating (Ca) and applying an axial load three times greater than the pre-load.
These values do not include the rigidity of the components related to mounting the ball screw nut. Therefore, it is normally appropriate to regard roughly 80% of the value in the table as the actual value.
If the applied preload (Fa_0) is not 0.1 Ca, the rigidity value (K_N) is obtained from the following equation.

$$K_N = K \left(\frac{Fa_0}{0.1Ca} \right)^{\frac{1}{3}}$$

K: Rigidity value in the dimensional table

Options⇒A15-333

SBK Small
With Preload

DN value	130000

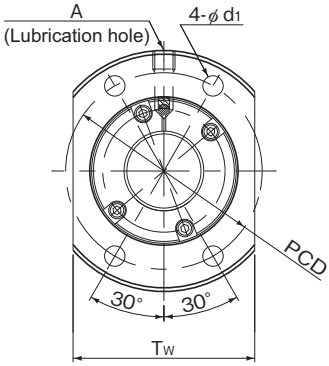

Model No.	Screw shaft outer diameter	Lead	Ball center-to-center diameter	Thread minor diameter	No. of loaded circuits	Basic load rating		Rigidity
						Ca	C_0a	K
	d	Ph	dp	dc	Rows × turns	kN	kN	N/μm
SBK 1520-3.6	15	20	15.75	12.2	1×1.8	5.8	7.8	178
SBK 1616-3.6	16	16	16.65	13.5	1×1.8	4.6	6.4	182
SBK 2010-5.6	20	10	20.75	17.2	1×2.8	10.7	17.3	353
SBK 2020-3.6	20	20	20.75	17.2	1×1.8	7	10.5	229
SBK 2030-3.6	20	30	20.75	17.2	1×1.8	6.9	11.2	236
SBK 2520-3.6	25	20	26	21.5	1×1.8	11	16.9	292
SBK 2525-3.6	25	25	26	21.5	1×1.8	10.8	16.9	290
SBK 3220-5.6	32	20	33.25	27.9	1×2.8	23.6	41.1	565
SBK 3232-5.6	32	32	33.25	27.9	1×2.8	23.1	41.8	567

Axial Clearance

Unit: mm

Clearance symbol	G0
Axial Clearance	0 or less

Model number coding

SBK2525-3.6 QZ G0 +1200L C5

- SBK2525-3.6: Model Number
- QZ: With QZ Lubricator (no symbol if the model is without a QZ Lubricator)
- G0: Symbol for clearance in the axial direction (G0 for all SBK variations)
- +1200L: Overall screw shaft length (in mm)
- C5: Accuracy symbol (*1)

(*1) See A15-12.

Download data by searching for the corresponding model number on the Technical Support site. https://tech.thk.com

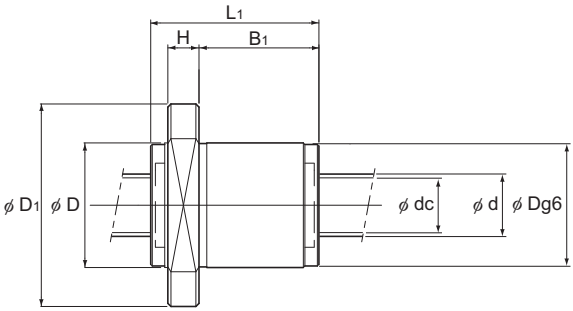

Unit: mm

	Nut dimensions									Screw shaft inertial moment/mm	Nut mass	Shaft mass	Permissible rotational speed
	Outer diameter	Flange diameter	Overall length						Lubrication hole				
	D	D_1	L_1	H	B_1	PCD	d_1	T_W	A	kg·m²/mm	kg	kg/m	min⁻¹
	38	62	54	10	38.5	49	5.5	39	M6	3.90×10^{-8}	0.41	1.27	5000
	33	54	45	10	29.5	43	4.5	38	M6	5.05×10^{-8}	0.25	1.46	5000
	40	65	45	10	29.5	53	5.5	49	M6	1.23×10^{-7}	0.37	2.18	5000
	40	65	54	10	38.5	53	5.5	49	M6	1.23×10^{-7}	0.43	2.32	5000
	40	65	71	10	55.5	53	5.5	49	M6	1.23×10^{-7}	0.55	2.36	5000
	47	74	57	12	38	60	6.6	56	M6	3.01×10^{-7}	0.59	3.58	5000
	47	74	68	12	49	60	6.6	56	M6	3.01×10^{-7}	0.69	3.63	5000
	58	92	82	15	58	74	9	68	M6	8.08×10^{-7}	1.23	5.82	3900
	58	92	118	15	94	74	9	68	M6	8.08×10^{-7}	1.70	5.99	3900

Note) The rigidity values in the table represent spring constants, each obtained from the load and the elastic deformation when providing a preload equal to 10% of the basic axial dynamic load rating (Ca) and applying an axial load three times greater than the pre-load.
These values do not include the rigidity of the components related to mounting the ball screw nut. Therefore, it is normally appropriate to regard roughly 80% of the value in the table as the actual value.
If the applied preload (Fa_0) is not 0.1 Ca, the rigidity value (K_N) is obtained from the following equation.

$$K_N = K\left(\frac{Fa_0}{0.1Ca}\right)^{\frac{1}{3}}$$

K: Rigidity value in the dimensional table

Options⇒A15-333

SBK Medium With Preload

DN value	SBK3636,4040,5050	210000
	All other Model SBK units	160000

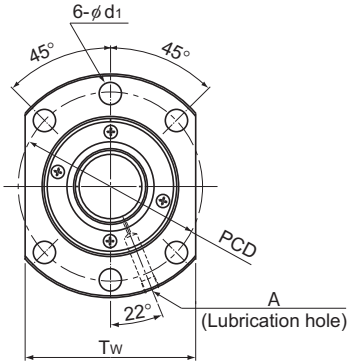

Model No.	Screw shaft outer diameter d	Lead Ph	Ball center-to-center diameter dp	Thread minor diameter dc	No. of loaded circuits Rows × turns	Basic load rating Ca kN	Basic load rating C_0a kN	Rigidity K N/μm
SBK 3620-7.6	36	20	37.75	30.4	1×3.8	48.5	85	870
SBK 3636-5.6	36	36	37.75	31.4	1×2.8	36.6	64.7	460
SBK 4020-7.6	40	20	42	34.1	1×3.8	59.7	112.7	970
SBK 4030-7.6	40	30	42	34.1	1×3.8	59.2	107.5	970
SBK 4040-5.6	40	40	42	34.9	1×2.8	44.8	80.3	520
SBK 5020-7.6	50	20	52	44.1	1×3.8	66.8	141.9	1170
SBK 5030-7.6	50	30	52	44.1	1×3.8	66.5	135	1170
SBK 5036-7.6	50	36	52	44.1	1×3.8	65.9	135	1170
SBK 5050-5.6	50	50	52	44.9	1×2.8	50.3	102.4	630
SBK 5520-7.6	55	20	57	49.1	1×3.8	69.8	156.4	1250
SBK 5530-7.6	55	30	57	49.1	1×3.8	69.2	147	1250
SBK 5536-7.6	55	36	57	49.1	1×3.8	69.1	148.7	1260

Note) With model SBK, the raising of both ends of the thread groove is not available. When designing your system this way, contact THK.

Axial Clearance

Unit: mm

Clearance symbol	G0
Axial Clearance	0 or less

Model number coding

SBK3620-7.6 RR G0 +1500L C5

- SBK3620-7.6: Model number
- RR: Seal symbol (*1)
- G0: Symbol for clearance in the axial direction (G0 for all SBK variations)
- +1500L: Overall screw shaft length (in mm)
- C5: Accuracy symbol (*2)

(*1) See A15-334. (*2) See A15-12.

Download data by searching for the corresponding model number on the Technical Support site. https://tech.thk.com

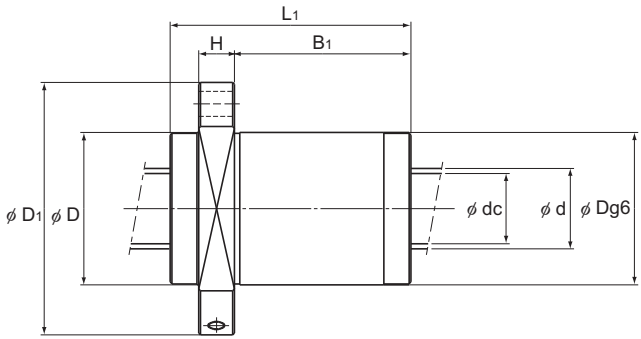

Unit: mm

	Nut dimensions									Screw shaft inertial moment/mm	Nut mass	Shaft mass	Permissible rotational speed
	Outer diameter	Flange diameter	Overall length						Lubrication hole				
	D	D_1	L_1	H	B_1	PCD	d_1	T_W	A	kg·m²/mm	kg	kg/m	min⁻¹
	73	114	110	18	81	93	11	86	Rc1/8 (PT1/8)	1.29×10^{-6}	3.4	5.0	4230
	73	114	134	18	105	93	11	86		1.29×10^{-6}	3.37	7.43	5000
	80	136	110	20	79	112	14	103		1.97×10^{-6}	4.5	5.7	3800
	80	136	148	20	117	112	14	103		1.97×10^{-6}	5.6	7.0	3800
	80	136	146	20	115	112	14	103		1.97×10^{-6}	4.74	9.16	5000
	90	146	110	22	77	122	14	110		4.82×10^{-6}	5.3	10.2	3070
	90	146	149	22	116	122	14	110		4.82×10^{-6}	6.6	11.9	3070
	90	146	172	22	139	122	14	110		4.82×10^{-6}	7.4	12.5	3070
	90	146	175	22	142	122	14	110		4.82×10^{-6}	6.46	14.72	4030
	96	152	110	22	77	128	14	114		7.05×10^{-6}	5.7	13.0	2800
	96	152	149	22	116	128	14	114		7.05×10^{-6}	7.2	14.8	2800
	96	152	172	22	139	128	14	114		7.05×10^{-6}	8.1	15.5	2800

Note) The rigidity values in the table represent spring constants, each obtained from the load and the elastic deformation when providing a preload equal to 10% of the basic axial dynamic load rating (Ca) and applying an axial load three times greater than the pre-load.
These values do not include the rigidity of the components related to mounting the ball screw nut. Therefore, it is normally appropriate to regard roughly 80% of the value in the table as the actual value.
If the applied preload (Fa_0) is not 0.1 Ca, the rigidity value (K_N) is obtained from the following equation.

$$K_N = K\left(\frac{Fa_0}{0.1Ca}\right)^{\frac{1}{3}}$$

K: Rigidity value in the dimensional table

Options⇒A15-333

BIF-V Small
With Preload

DN value	100000

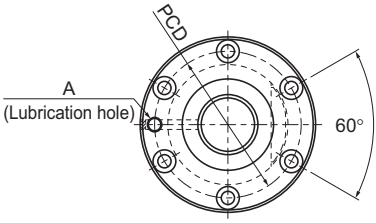

Model No.	Screw shaft outer diameter	Lead	Ball center-to-center diameter	Thread minor diameter	No. of loaded circuits	Basic load rating		Rigidity
						Ca	C₀a	K
	d	Ph	dp	dc	Rows × turns	kN	kN	N/μm
BIF 1604V-5	16	4	16.5	13.8	1×2.5	4.3	8.7	298
BIF 1605V-5	16	5	16.75	13.2	1×2.5	7.4	13.9	330
BIF 2004V-5	20	4	20.5	17.8	1×2.5	4.8	10.9	360
BIF 2004V-10	20	4	20.5	17.8	2×2.5	8.6	21.8	692
BIF 2005V-5	20	5	20.75	17.2	1×2.5	8.3	17.5	390
BIF 2005V-10	20	5	20.75	17.2	2×2.5	15.1	35	762
BIF 2010V-5	20	10	20.75	17.2	1×2.5	8.3	17.6	394
BIF 2504V-5	25	4	25.5	22.8	1×2.5	5.2	13.7	426
BIF 2504V-10	25	4	25.5	22.8	2×2.5	9.5	27.4	824
BIF 2505V-5	25	5	25.75	22.2	1×2.5	9.2	21.9	470
BIF 2505V-10	25	5	25.75	22.2	2×2.5	16.7	43.9	910
BIF 2506V-5	25	6	26	21.4	1×2.5	12.4	27.4	482
BIF 2506V-10	25	6	26	21.4	2×2.5	22.6	54.8	934
BIF 2805V-5	28	5	28.75	25.2	1×2.5	9.7	24.6	520
BIF 2805V-10	28	5	28.75	25.2	2×2.5	17.5	49.2	1000
BIF 2806V-5	28	6	28.75	25.2	1×2.5	9.6	24.6	520
BIF 2806V-10	28	6	28.75	25.2	2×2.5	17.5	49.2	1000
BIF 3205V-5	32	5	32.75	29.2	1×2.5	10.2	28.1	570
BIF 3205V-10	32	5	32.75	29.2	2×2.5	18.5	56.3	1110
BIF 3206V-5	32	6	33	28.4	1×2.5	13.9	35.2	600
BIF 3206V-10	32	6	33	28.4	2×2.5	25.2	70.3	1150

Download data by searching for the corresponding model number on the Technical Support site. https://tech.thk.com

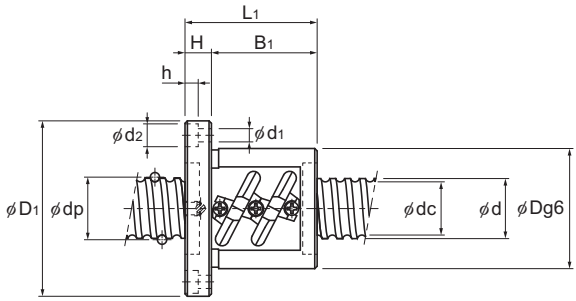

Unit: mm

	Nut dimensions								Screw shaft inertial moment/mm	Nut mass	Shaft mass	Permissible rotational speed
	Outer diameter	Flange diameter	Overall length					Lubrication hole				
	D	D_1	L_1	H	B_1	PCD	$d_1 \times d_2 \times h$	A	kg·m²/mm	kg	kg/m	min⁻¹
	36	59	53	11	42	47	5.5×9.5×5.5	M6	5.05×10^{-8}	0.42	1.42	5000
	40	60	56	10	46	50	4.5×8×4.5	M6	5.05×10^{-8}	0.56	1.37	5000
	40	63	49	11	38	51	5.5×9.5×5.5	M6	1.23×10^{-7}	0.43	2.22	4870
	40	63	73	11	62	51	5.5×9.5×5.5	M6	1.23×10^{-7}	0.55	2.22	4870
	44	67	56	11	45	55	5.5×9.5×5.5	M6	1.23×10^{-7}	0.57	2.19	4810
	44	67	86	11	75	55	5.5×9.5×5.5	M6	1.23×10^{-7}	0.79	2.19	4810
	46	74	90	15	75	59	5.5×9.5×5.5	M6	1.23×10^{-7}	1.06	2.46	4810
	46	69	48	11	37	57	5.5×9.5×5.5	M6	3.01×10^{-7}	0.55	3.6	3920
	46	69	72	11	61	57	5.5×9.5×5.5	M6	3.01×10^{-7}	0.66	3.6	3920
	50	73	55	11	44	61	5.5×9.5×5.5	M6	3.01×10^{-7}	0.75	3.52	3880
	50	73	85	11	74	61	5.5×9.5×5.5	M6	3.01×10^{-7}	0.96	3.52	3880
	53	76	62	11	51	64	5.5×9.5×5.5	M6	3.01×10^{-7}	0.9	3.43	3840
	53	76	98	11	87	64	5.5×9.5×5.5	M6	3.01×10^{-7}	1.22	3.43	3840
	55	85	59	12	47	69	6.6×11×6.5	M6	4.74×10^{-7}	0.98	4.35	3470
	55	85	89	12	77	69	6.6×11×6.5	M6	4.74×10^{-7}	1.34	4.35	3470
	55	85	68	12	56	69	6.6×11×6.5	M6	4.74×10^{-7}	1.09	4.52	3470
	55	85	104	12	92	69	6.6×11×6.5	M6	4.74×10^{-7}	1.52	4.52	3470
	58	85	56	12	44	71	6.6×11×6.5	M6	8.08×10^{-7}	0.94	5.89	3050
	58	85	86	12	74	71	6.6×11×6.5	M6	8.08×10^{-7}	1.31	5.89	3050
	62	89	63	12	51	75	6.6×11×6.5	M6	8.08×10^{-7}	1.21	5.88	3030
	62	89	99	12	87	75	6.6×11×6.5	M6	8.08×10^{-7}	1.75	5.88	3030

Note) The overall length of the nut will increase when equipping the QZ lubricating device. See A15-344 for further details.

Options⇒A15-333

BIF-V Medium With Preload

DN value	130000

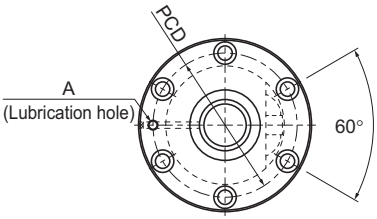

Model No.	Screw shaft outer diameter	Lead	Ball center-to-center diameter	Thread minor diameter	No. of loaded circuits	Basic load rating		Rigidity
						Ca	C₀a	K
	d	Ph	dp	dc	Rows × turns	kN	kN	N/μm
BIF 2508V-5	25	8	26.25	20.5	1×2.5	15.8	32.9	500
BIF 2508V-7	25	8	26.25	20.5	1×3.5	21.1	46	688
BIF 2508V-10	25	8	26.25	20.5	2×2.5	28.7	65.7	968
BIF 2510V-5	25	10	26.25	21.5	1×2.5	15.8	32.9	500
BIF 2810V-3	28	10	29.75	22.4	1×1.5	15.6	29.4	350
BIF 3210V-5	32	10	33.75	26.4	1×2.5	26	56.2	640
BIF 3210V-7	32	10	33.75	26.4	1×3.5	34.8	78.6	874
BIF 3210V-10	32	10	33.75	26.4	2×2.5	47.3	112.3	1128
BIF 3212V-5	32	12	34	26.1	1×2.5	30.2	63.2	644
BIF 3212V-7	32	12	34	26.1	1×3.5	40.4	88.5	888
BIF 3216V-5	32	16	33.75	26.4	1×2.5	25.9	56.5	636
BIF 3610V-5	36	10	37.75	30.5	1×2.5	27.6	63.3	696
BIF 3610V-7	36	10	37.75	30.5	1×3.5	36.9	88.6	700
BIF 3610V-10	36	10	37.75	30.5	2×2.5	50.1	126.5	1350
BIF 3612V-5	36	12	38	30.1	1×2.5	32.2	71.2	708
BIF 3612V-7	36	12	38	30.1	1×3.5	43	99.6	976
BIF 3612V-10	36	12	38	30.1	2×2.5	58.4	142.3	1372
BIF 3616V-5	36	16	38	30.1	1×2.5	32.1	71.5	710
BIF 3620V-3	36	20	37.75	30.5	1×1.5	17.7	38.4	430
BIF 4010V-5	40	10	41.75	34.4	1×2.5	29	70.4	750
BIF 4010V-7	40	10	41.75	34.4	1×3.5	38.8	98.5	1044
BIF 4010V-10	40	10	41.75	34.4	2×2.5	52.7	140.7	1470
BIF 4012V-5	40	12	42	34.1	1×2.5	33.9	79.2	770
BIF 4012V-7	40	12	42	34.1	1×3.5	45.3	110.8	1062
BIF 4012V-10	40	12	42	34.1	2×2.5	61.6	158.3	1490
BIF 4016V-5	40	16	42	34.1	1×2.5	33.9	79.4	772
BIF 4020V-5	40	20	41.75	34.4	1×2.5	28.9	71	760

Download data by searching for the corresponding model number on the Technical Support site. https://tech.thk.com

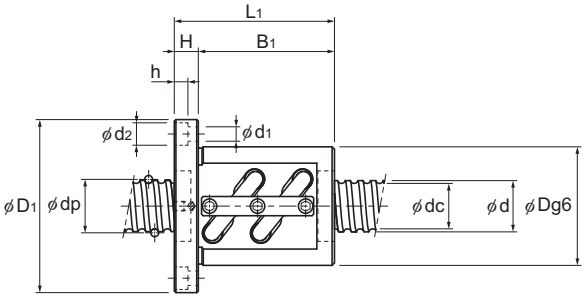

Unit: mm

	Nut dimensions								Screw shaft inertial moment/mm	Nut mass	Shaft mass	Permissible rotational speed
	Outer diameter	Flange diameter	Overall length					Lubrication hole				
	D	D_1	L_1	H	B_1	PCD	$d_1 \times d_2 \times h$	A	kg·m²/mm	kg	kg/m	min⁻¹
	58	85	82	15	67	71	6.6×11×6.5	M6	3.01×10^{-7}	1.52	3.51	4950
	58	85	98	15	83	71	6.6×11×6.5	M6	3.01×10^{-7}	1.5	3.51	4950
	58	85	130	15	115	71	6.6×11×6.5	M6	3.01×10^{-7}	1.93	3.51	4950
	58	85	100	18	82	71	6.6×11×6.5	M6	3.01×10^{-7}	1.31	3.5	4950
	65	106	88	18	70	85	11×17.5×11	M6	4.74×10^{-7}	2.33	4.15	4360
	74	108	100	15	85	90	9×14×8.5	M6	8.08×10^{-7}	2.92	5.53	3850
	74	108	120	15	105	90	9×14×8.5	M6	8.08×10^{-7}	3.1	5.53	3850
	74	108	160	15	145	90	9×14×8.5	M6	8.08×10^{-7}	4.27	5.53	3850
	76	121	117	18	99	98	11×17.5×11	M6	8.08×10^{-7}	3.7	5.7	3820
	76	121	146	18	128	98	11×17.5×11	M6	8.08×10^{-7}	3.7	5.7	3820
	74	108	139	18	121	90	9×14×8.5	M6	8.08×10^{-7}	3.81	5.82	3850
	75	120	111	18	93	98	11×17.5×11	M6	1.29×10^{-6}	3.45	7.1	3440
	75	120	123	18	105	98	11×17.5×11	M6	1.29×10^{-6}	3.82	7.1	3440
	75	120	171	18	153	98	11×17.5×11	M6	1.29×10^{-6}	4.84	7.1	3440
	78	123	123	18	105	100	11×17.5×11	M6	1.29×10^{-6}	4.69	7.99	3420
	78	123	140	18	122	100	11×17.5×11	M6	1.29×10^{-6}	4.34	7.99	3420
	78	123	195	18	177	100	11×17.5×11	M6	1.29×10^{-6}	5.67	7.99	3420
	78	123	140	18	122	100	11×17.5×11	M6	1.29×10^{-6}	4.31	7.99	3420
	75	114	122	18	104	93	11×17.5×11	M6	1.29×10^{-6}	3.4	7.54	3440
	82	124	103	18	85	102	11×17.5×11	M6	1.97×10^{-6}	3.61	8.87	3110
	82	124	123	18	105	102	11×17.5×11	M6	1.97×10^{-6}	3.97	8.87	3110
	82	124	163	18	145	102	11×17.5×11	M6	1.97×10^{-6}	5.33	8.87	3110
	84	126	119	18	101	104	11×17.5×11	M6	1.97×10^{-6}	4.36	8.83	3090
	84	126	143	18	125	104	11×17.5×11	M6	1.97×10^{-6}	4.92	8.83	3090
	84	126	191	18	173	104	11×17.5×11	M6	1.97×10^{-6}	6.47	8.83	3090
	84	126	144	18	126	104	11×17.5×11	M6	1.97×10^{-6}	4.9	9.09	3090
	82	126	162	18	144	104	11×17.5×11	M6	1.97×10^{-6}	5.17	9.37	3110

Note) The overall length of the nut will increase when equipping the QZ lubricating device. See **A15-344** for further details.

Options⇒A15-333

BIF-V Medium With Preload

DN value	130000

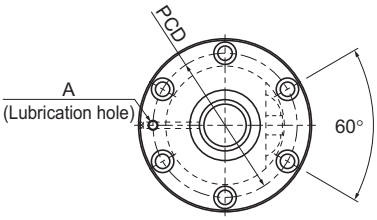

Model No.	Screw shaft outer diameter	Lead	Ball center-to-center diameter	Thread minor diameter	No. of loaded circuits	Basic load rating		Rigidity
						Ca	C₀a	K
	d	Ph	dp	dc	Rows × turns	kN	kN	N/μm
BIF 4510V-5	45	10	46.75	39.5	1×2.5	30.6	79.3	830
BIF 4510V-10	45	10	46.75	39.5	2×2.5	55.6	158.5	1610
BIF 4512V-5	45	12	47	39.2	1×2.5	35.9	89.2	846
BIF 4512V-10	45	12	47	39.2	2×2.5	65.2	178.3	1638
BIF 4516V-5	45	16	47	39.2	1×2.5	35.8	89.4	846
BIF 4520V-5	45	20	47	39.2	1×2.5	35.8	89.7	848
BIF 5010V-5	50	10	51.75	44.4	1×2.5	32.1	88.1	900
BIF 5010V-7	50	10	51.75	44.4	1×3.5	42.9	123.4	1244
BIF 5010V-10	50	10	51.75	44.4	2×2.5	58.2	176.3	1750
BIF 5012V-5	50	12	52.25	43.3	1×2.5	43.4	110.1	934
BIF 5012V-7	50	12	52.25	43.3	1×3.5	58	154.1	1286
BIF 5012V-10	50	12	52.25	43.3	2×2.5	78.8	220.2	1808
BIF 5016V-5	50	16	52.7	42.9	1×2.5	72.6	183.1	1220
BIF 5016V-10	50	16	52.7	42.9	2×2.5	131.8	366.2	2364
BIF 5020V-5	50	20	52.7	42.9	1×2.5	72.5	183.6	1222

Download data by searching for the corresponding model number on the Technical Support site. https://tech.thk.com

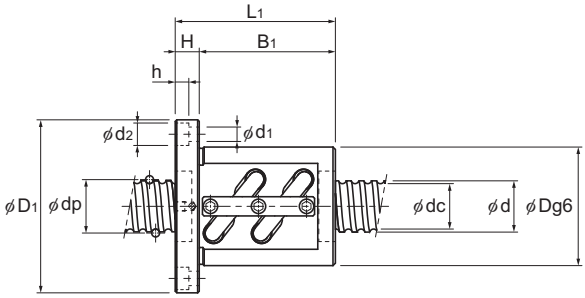

Unit: mm

	Nut dimensions								Screw shaft inertial moment/mm	Nut mass	Shaft mass	Permissible rotational speed
	Outer diameter D	Flange diameter D_1	Overall length L_1	H	B_1	PCD	$d_1 \times d_2 \times h$	Lubrication hole A	$kg \cdot m^2/mm$	kg	kg/m	min^{-1}
	88	132	111	18	93	110	11×17.5×11	Rc1/8 (PT1/8)	3.16×10^{-6}	4.29	12.48	2780
	88	132	171	18	153	110	11×17.5×11		3.16×10^{-6}	5.97	12.48	2780
	90	130	119	18	101	110	11×17.5×11		3.16×10^{-6}	4.6	11.32	2760
	90	130	191	18	173	110	11×17.5×11		3.16×10^{-6}	6.67	11.32	2760
	90	130	140	18	122	110	11×17.5×11		3.16×10^{-6}	5.3	11.61	2760
	90	130	162	18	144	110	11×17.5×11		3.16×10^{-6}	5.96	11.1	2760
	93	135	103	18	85	113	11×17.5×11		4.82×10^{-6}	4.28	14.16	2510
	93	135	123	18	105	113	11×17.5×11		4.82×10^{-6}	4.94	14.16	2510
	93	135	163	18	145	113	11×17.5×11		4.82×10^{-6}	6.26	14.16	2510
	100	146	123	22	101	122	14×20×13		4.82×10^{-6}	6.12	13.82	2480
	100	146	147	22	125	122	14×20×13		4.82×10^{-6}	7.06	13.82	2480
	100	146	195	22	173	122	14×20×13		4.82×10^{-6}	8.91	13.82	2480
	105	152	164	25	139	128	14×20×13		4.82×10^{-6}	8.82	13.71	2460
	105	152	260	25	235	128	14×20×13		4.82×10^{-6}	12.3	13.71	2460
	105	152	201	28	173	128	14×20×13		4.82×10^{-6}	10.63	14.05	2460

Note) The overall length of the nut will increase when equipping the QZ lubricating device. See A15-344 for further details.

Options⇒A15-333

BNFN-V Small/Medium With Preload

DN value	Small	100000
	Medium	130000

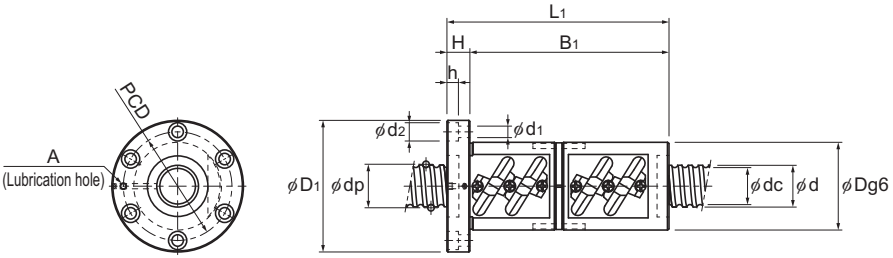

<Small> BNFN1605V/2805V/2806V/3205V

Model No.	Screw shaft outer diameter d	Lead Ph	Ball center-to-center diameter dp	Thread minor diameter dc	No. of loaded circuits Rows X turns	Basic load rating Ca kN	Basic load rating C0a kN	Rigidity K N/μm
BNFN 1605V-5	16	5	16.75	13.2	2×2.5	13.5	27.9	640
BNFN 2805V-7.5	28	5	28.75	25.2	3×2.5	24.8	73.8	1470
BNFN 2806V-7.5	28	6	28.75	25.2	3×2.5	24.8	73.8	1470
BNFN 3205V-7.5	32	5	32.75	29.2	3×2.5	26.2	84.4	1640

Model No.	Screw shaft outer diameter d	Lead Ph	Ball center-to-center diameter dp	Thread minor diameter dc	No. of loaded circuits Rows X turns	Basic load rating Ca kN	Basic load rating C0a kN	Rigidity K N/μm
BNFN 2810V-2.5	28	10	29.75	22.4	1×2.5	24.3	49	560
BNFN 3610V-7.5	36	10	37.75	30.5	3×2.5	71	189.8	1990
BNFN 3616V-5	36	16	38	30.1	2×2.5	58.3	142.9	1380
BNFN 4016V-5	40	16	42	34.1	2×2.5	61.5	158.8	1500
BNFN 4510V-7.5	45	10	46.75	39.5	3×2.5	78.8	237.8	2370
BNFN 5010V-7.5	50	10	51.75	44.4	3×2.5	82.5	264.4	2580

Download data by searching for the corresponding model number on the Technical Support site. https://tech.thk.com

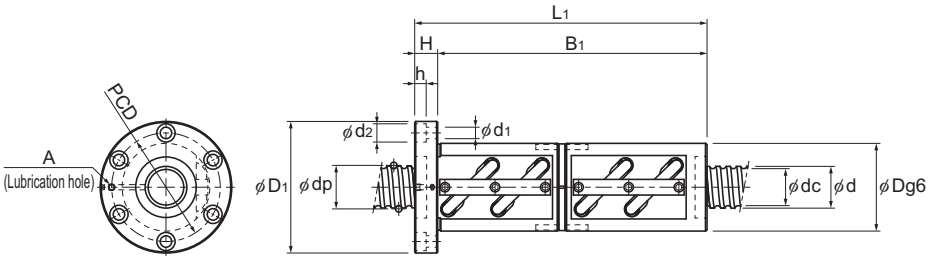

<Medium> BNFN2810V/3610V/3616V/4016V/4510V/5010V

Unit: mm

	Nut dimensions								Screw shaft inertial moment/mm	Nut mass	Shaft mass	Permissible rotational speed
	Outer diameter	Flange diameter	Overall length					Lubrication hole				
	D	D_1	L_1	H	B_1	PCD	$d_1 \times d_2 \times h$	A	$kg \cdot m^2/mm$	kg	kg/m	min^{-1}
	40	60	106	10	96	50	4.5×8×4.5	M6	5.05×10^{-8}	0.88	1.37	5000
	55	85	134	12	122	69	6.6×11×6.5	M6	4.74×10^{-7}	1.88	4.45	3470
	55	85	158	12	149	69	6.6×11×6.5	M6	4.74×10^{-7}	2.16	4.52	3470
	58	85	136	12	124	71	6.6×11×6.5	M6	8.08×10^{-7}	1.93	5.89	3050

	Nut dimensions								Screw shaft inertial moment/mm	Nut mass	Shaft mass	Permissible rotational speed
	Outer diameter	Flange diameter	Overall length					Lubrication hole				
	D	D_1	L_1	H	B_1	PCD	$d_1 \times d_2 \times h$	A	$kg \cdot m^2/mm$	kg	kg/m	min^{-1}
	65	106	146	18	128	85	11×17.5×11	M6	4.74×10^{-7}	3.41	4.15	4360
	75	120	261	18	243	98	11×17.5×11	M6	1.29×10^{-7}	6.93	7.1	3440
	78	123	268	18	250	100	11×17.5×11	M6	1.29×10^{-7}	7.8	7.99	3420
	84	126	280	22	258	104	11×17.5×11	M6	1.97×10^{-6}	9.27	9.09	3090
	88	132	261	18	243	110	11×17.5×11	Rc1/8 (PT1/8)	3.16×10^{-6}	8.92	11.36	2780
	93	135	253	18	235	113	11×17.5×11		4.82×10^{-6}	9.19	14.16	2510

Note) The overall length of the nut will increase when equipping the QZ lubricating device. See A15-344 for further details.

Options⇒A15-333

BNFN
With Preload

DN value	70000

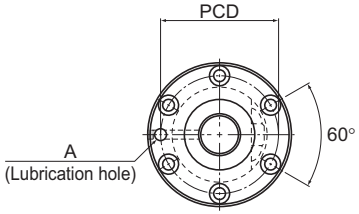

Model No.	Screw shaft outer diameter d	Lead Ph	Ball center-to-center diameter dp	Thread minor diameter dc	No. of loaded circuits Rows X turns	Basic load rating Ca kN	Basic load rating C_0a kN	Rigidity K N/μm
BNFN 5510-2.5	55	10	56.75	49.5	1×2.5	33.4	97	970
BNFN 5510-5	55	10	56.75	49.5	2×2.5	60.7	194	1890
BNFN 5510-7.5	55	10	56.75	49.5	3×2.5	85.9	291.1	2770
BNFN 5512-2.5	55	12	57	49.2	1×2.5	39.3	108.8	990
BNFN 5512-3	55	12	57	49.2	2×1.5	46	131.3	1180
BNFN 5512-3.5	55	12	57	49.2	1×3.5	52.4	152.9	1360
BNFN 5512-5	55	12	57	49.2	2×2.5	71.3	218.5	1920
BNFN 5512-7.5	55	12	57	49.2	3×2.5	100.9	327.3	2830
BNFN 5516-2.5	55	16	57.7	47.9	1×2.5	76.1	201.9	1310
BNFN 5516-5	55	16	57.7	47.9	2×2.5	138.2	402.8	2550
BNFN 5520-2.5	55	20	57.7	47.9	1×2.5	76	201.9	1320
BNFN 5520-5	55	20	57.7	47.9	2×2.5	138.2	403.8	2550
BNFN 6310-2.5	63	10	64.75	57.7	1×2.5	35.4	111.7	1090
BNFN 6310-5	63	10	64.75	57.7	2×2.5	64.2	222.5	2100
BNFN 6310-7.5	63	10	64.75	57.7	3×2.5	90.9	334.2	3090
BNFN 6312A-2.5	63	12	65.25	56.3	1×2.5	48.1	139.2	1120
BNFN 6312A-5	63	12	65.25	56.3	2×2.5	87.4	278.3	2160
BNFN 6316-2.5	63	16	65.7	55.9	1×2.5	81.1	231.3	1470
BNFN 6316-5	63	16	65.7	55.9	2×2.5	147	462.6	2840
BNFN 6320-2.5	63	20	65.7	55.9	1×2.5	81	231.3	1470
BNFN 6320-5	63	20	65.7	55.9	2×2.5	147	463.5	2640

Note) The model numbers in dimmed type indicate semi-standard types.
If desiring them, contact THK.

Download data by searching for the corresponding model number on the Technical Support site. https://tech.thk.com

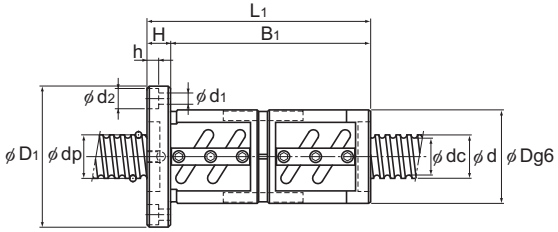

Unit: mm

	Nut dimensions								Screw shaft inertial moment/mm	Nut mass	Shaft mass	Permissible rotational speed
	Outer diameter	Flange diameter	Overall length					Lubrication hole				
	D	D_1	L_1	H	B_1	PCD	$d_1 \times d_2 \times h$	A	$kg \cdot m^2/mm$	kg	kg/m	min^{-1}
	102	144	141	18	123	122	11×17.5×11	Rc1/8 (PT1/8)	7.05×10^{-6}	6.54	16.43	1230
	102	144	201	18	183	122	11×17.5×11		7.05×10^{-6}	8.88	16.43	1230
	102	144	261	18	243	122	11×17.5×11		7.05×10^{-6}	11.23	16.43	1230
	105	147	165	18	147	125	11×17.5×11		7.05×10^{-6}	8.07	16.29	1220
	105	147	191	18	173	125	11×17.5×11		7.05×10^{-6}	9.17	16.29	1220
	105	147	189	18	171	125	11×17.5×11		7.05×10^{-6}	9.09	16.29	1220
	105	147	237	18	219	125	11×17.5×11		7.05×10^{-6}	11.13	16.29	1220
	105	147	309	18	291	125	11×17.5×11		7.05×10^{-6}	14.19	16.29	1220
	110	158	196	25	171	133	14×20×13		7.05×10^{-6}	11.28	15.46	1210
	110	158	292	25	267	133	14×20×13		7.05×10^{-6}	15.94	15.46	1210
	112	158	227	28	199	134	14×20×13		7.05×10^{-6}	13.49	16.1	1210
	112	158	347	28	319	134	14×20×13		7.05×10^{-6}	19.61	16.1	1210
	108	154	137	22	115	130	14×20×13		1.21×10^{-5}	6.98	21.93	1080
	108	154	197	22	175	130	14×20×13		1.21×10^{-5}	9.4	21.93	1080
	108	154	257	22	235	130	14×20×13		1.21×10^{-5}	11.81	21.93	1080
	115	161	159	22	137	137	14×20×13		1.21×10^{-5}	9.32	21.14	1070
	115	161	231	22	209	137	14×20×13		1.21×10^{-5}	12.84	21.14	1070
	122	184	208	24	184	152	18×26×17.5		1.21×10^{-5}	14.61	20.85	1060
	122	184	304	24	280	152	18×26×17.5		1.21×10^{-5}	20.19	20.85	1060
	122	180	227	28	199	150	18×26×17.5		1.21×10^{-5}	15.91	20.85	1060
	122	180	347	28	319	150	18×26×17.5		1.21×10^{-5}	22.88	20.85	1060

Note) The overall length of the nut will increase when equipping the QZ lubricating device. See **A15-344** for further details.

Options⇒A15-333

BNFN
With Preload

DN value	70000

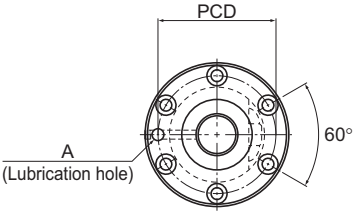

Model No.	Screw shaft outer diameter d	Lead Ph	Ball center-to-center diameter dp	Thread minor diameter dc	No. of loaded circuits Rows X turns	Basic load rating Ca kN	Basic load rating C_0a kN	Rigidity K N/μm
BNFN 7010-2.5	70	10	71.75	64.5	1×2.5	36.8	123.5	1180
BNFN 7010-5	70	10	71.75	64.5	2×2.5	66.9	247	2280
BNFN 7010-7.5	70	10	71.75	64.5	3×2.5	94.9	371.4	3350
BNFN 7012-2.5	70	12	72	64.2	1×2.5	43.5	139.2	1200
BNFN 7012-5	70	12	72	64.2	2×2.5	78.9	278.3	2320
BNFN 7012-7.5	70	12	72	64.2	3×2.5	111.7	417.5	3420
BNFN 7020-5	70	20	72.7	62.9	2×2.5	153.9	514.5	3090
BNFN 8010-2.5	80	10	81.75	75.2	1×2.5	38.9	141.1	1300
BNFN 8010-5	80	10	81.75	75.2	2×2.5	70.6	283.2	2530
BNFN 8010-7.5	80	10	81.75	75.2	3×2.5	100	424.3	3720
BNFN 8012-5	80	12	82.3	74.1	2×2.5	96.5	353.8	2620
BNFN 8020A-2.5	80	20	82.7	72.9	1×2.5	90.1	294	1770
BNFN 8020A-5	80	20	82.7	72.9	2×2.5	163.7	589	3430
BNFN 10020A-2.5	100	20	102.7	92.9	1×2.5	99	368.5	2110
BNFN 10020A-5	100	20	102.7	92.9	2×2.5	179.3	737	4080
BNFN 10020A-7.5	100	20	102.7	92.9	3×2.5	253.8	1105.4	6010

Note) The model numbers in dimmed type indicate semi-standard types.
If desiring them, contact THK.

Download data by searching for the corresponding model number on the Technical Support site. https://tech.thk.com

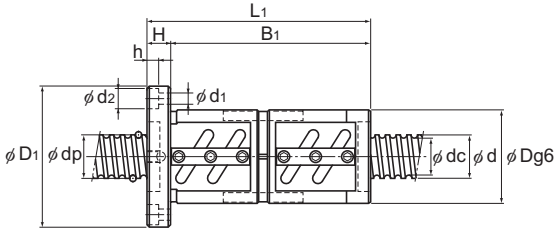

Unit: mm

	Nut dimensions								Screw shaft inertial moment/mm	Nut mass	Shaft mass	Permissible rotational speed
	Outer diameter	Flange diameter	Overall length					Lubrication hole				
	D	D_1	L_1	H	B_1	PCD	$d_1 \times d_2 \times h$	A	$kg \cdot m^2/mm$	kg	kg/m	min^{-1}
	125	167	141	18	123	145	11×17.5×11	Rc1/8 (PT1/8)	1.85×10^{-5}	9.19	27.4	970
	125	167	201	18	183	145	11×17.5×11		1.85×10^{-5}	12.57	27.4	970
	125	167	261	18	243	145	11×17.5×11		1.85×10^{-5}	15.96	27.4	970
	128	170	165	18	147	148	11×17.5×11		1.85×10^{-5}	11.26	27.24	970
	128	170	237	18	219	148	11×17.5×11		1.85×10^{-5}	15.63	27.24	970
	128	170	309	18	291	148	11×17.5×11		1.85×10^{-5}	20	27.24	970
	130	186	325	28	297	158	18×26×17.5		1.85×10^{-5}	23.4	27	960
	130	176	137	22	115	152	14×20×13		3.16×10^{-5}	9.15	36.26	850
	130	176	197	22	175	152	14×20×13		3.16×10^{-5}	12.41	36.26	850
	130	176	257	22	235	152	14×20×13		3.16×10^{-5}	15.67	36.26	850
	135	181	231	22	209	157	14×20×13		3.16×10^{-5}	16.02	35.26	850
	143	204	227	28	199	172	18×26×17.5		3.16×10^{-5}	20.08	35.81	840
	143	204	347	28	319	172	18×26×17.5		3.16×10^{-5}	28.97	35.81	840
	170	243	231	32	199	205	22×32×21.5		7.71×10^{-5}	28.15	57.13	680
	170	243	351	32	319	205	22×32×21.5		7.71×10^{-5}	39.99	57.13	680
	170	243	471	32	439	205	22×32×21.5		7.71×10^{-5}	51.84	57.13	680

Note) The overall length of the nut will increase when equipping the QZ lubricating device. See A15-344 for further details.

Options⇒A15-333

DIK
With Preload

DN value	70000

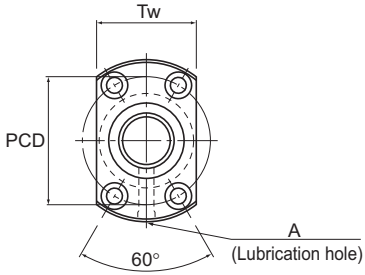

Model No.	Screw shaft outer diameter	Lead	Ball center-to-center diameter	Thread minor diameter	No. of loaded circuits	Basic load rating		Rigidity
						Ca	C₀a	K
	d	Ph	dp	dc	Rows × turns	kN	kN	N/μm
DIK 1404-4	14	4	14.5	11.8	2×1	3	5.1	190
DIK 1404-6	14	4	14.5	11.8	3×1	4.2	7.7	280
DIK 1605-6	16	5	16.75	13.2	3×1	7.4	13	310
DIK 2004-6	20	4	20.5	17.8	3×1	5.2	11.6	380
DIK 2004-8	20	4	20.5	17.8	4×1	6.6	15.5	510
DIK 2005-6	20	5	20.75	17.2	3×1	8.5	17.3	310
DIK 2006-6	20	6	21	16.4	3×1	11.4	21.5	410
DIK 2008-4	20	8	21	16.4	2×1	8.1	14.4	280
DIK 2504-6	25	4	25.5	22.8	3×1	5.7	15	470
DIK 2504-8	25	4	25.5	22.8	4×1	7.4	19.9	620
DIK 2505-6	25	5	25.75	22.2	3×1	9.7	22.6	490
DIK 2506-4	25	6	26	21.4	2×1	9.1	18	330
DIK 2506-6	25	6	26	21.4	3×1	12.8	27	490
DIK 2508-4	25	8	26	21.4	2×1	9.2	18.8	340
DIK 2508-6	25	8	26	21.4	3×1	13.1	28.1	500
DIK 2510-4	25	10	26	21.6	2×1	9	18	330

Download data by searching for the corresponding model number on the Technical Support site. https://tech.thk.com

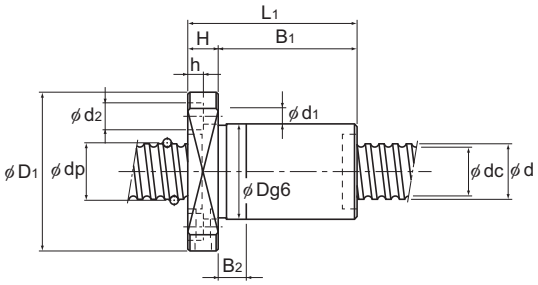

Unit: mm

	Nut dimensions										Screw shaft inertial moment/mm	Nut mass	Shaft mass	Permissible rotational speed
	Outer diameter	Flange diameter	Overall length							Lubrication hole				
	D	D_1	L_1	H	B_1	B_2	PCD	$d_1 \times d_2 \times h$	Tw	A	kg·m²/mm	kg	kg/m	min^{-1}
	26	45	48	10	38	10	35	4.5×8×4.5	29	M6	2.96×10^{-8}	0.2	1	4820
	26	45	60	10	50	10	35	4.5×8×4.5	29	M6	2.96×10^{-8}	0.23	1	4820
	30	49	60	10	50	10	39	4.5×8×4.5	31	M6	5.05×10^{-8}	0.3	1.25	4170
	32	56	62	11	51	15	44	5.5×9.5×5.5	35	M6	1.23×10^{-7}	0.34	2.18	3410
	32	56	70	11	59	15	44	5.5×9.5×5.5	35	M6	1.23×10^{-7}	0.37	2.18	3410
	34	58	61	11	50	10	46	5.5×9.5×5.5	36	M6	1.23×10^{-7}	0.38	2.06	3370
	35	58	76	11	65	15	46	5.5×9.5×5.5	36	M6	1.23×10^{-7}	0.48	1.93	3330
	35	58	69	11	58	15	46	5.5×9.5×5.5	36	M6	1.23×10^{-7}	0.45	2.06	3330
	38	63	63	11	52	15	51	5.5×9.5×5.5	39	M6	3.01×10^{-7}	0.43	3.5	2740
	38	63	71	11	60	15	51	5.5×9.5×5.5	39	M6	3.01×10^{-7}	0.47	3.5	2740
	40	63	61	11	50	10	51	5.5×9.5×5.5	41	M6	3.01×10^{-7}	0.47	3.35	2710
	40	63	60	11	49	10	51	5.5×9.5×5.5	41	M6	3.01×10^{-7}	0.46	3.19	2690
	40	63	72	11	61	15	51	5.5×9.5×5.5	41	M6	3.01×10^{-7}	0.54	3.19	2690
	40	63	71	12	59	15	51	5.5×9.5×5.5	41	M6	3.01×10^{-7}	0.54	3.35	2690
	40	63	94	12	82	25	51	5.5×9.5×5.5	41	M6	3.01×10^{-7}	0.68	3.35	2690
	40	63	85	15	70	20	51	5.5×9.5×5.5	41	M6	3.01×10^{-7}	0.65	3.45	2690

Note) The overall length of the nut will increase when equipping the QZ lubricating device. See A15-344 for further details.

Options⇒A15-333

DIK
With Preload

DN value	70000

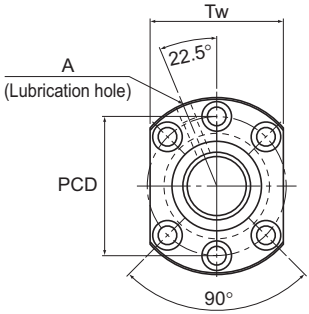

Model No.	Screw shaft outer diameter	Lead	Ball center-to-center diameter	Thread minor diameter	No. of loaded circuits	Basic load rating		Rigidity
						Ca	C_0a	K
	d	Ph	dp	dc	Rows × turns	kN	kN	N/μm
DIK 2805-6	28	5	28.75	25.2	3×1	10.5	26.4	560
DIK 2805-8	28	5	28.75	25.2	4×1	13.4	35.2	730
DIK 2806-6	28	6	29	24.4	3×1	14	32	530
DIK 2810-4	28	10	29.25	23.6	2×1	12.3	25	380
DIK 3204-6	32	4	32.5	30.1	3×1	6.4	19.6	580
DIK 3204-8	32	4	32.5	30.1	4×1	8.2	26.1	760
DIK 3204-10	32	4	32.5	30.1	5×1	10	32.7	940
DIK 3205-6	32	5	32.75	29.2	3×1	11.1	30.2	620
DIK 3205-8	32	5	32.75	29.2	4×1	14.2	40.3	810
DIK 3206-6	32	6	33	28.4	3×1	14.9	37.1	630
DIK 3206-8	32	6	33	28.4	4×1	19.1	49.5	820
DIK 3210-6	32	10	33.75	26.4	3×1	25.7	52.2	600
DIK 3212-4	32	12	33.75	26.4	2×1	18.8	37	430
DIK 3610-6	36	10	37.75	30.5	3×1	28.8	63.8	710
DIK 3610-8	36	10	37.75	30.5	4×1	36.8	85	940
DIK 3610-10	36	10	37.75	30.5	5×1	44.6	106.3	1160

Download data by searching for the corresponding model number on the Technical Support site. https://tech.thk.com

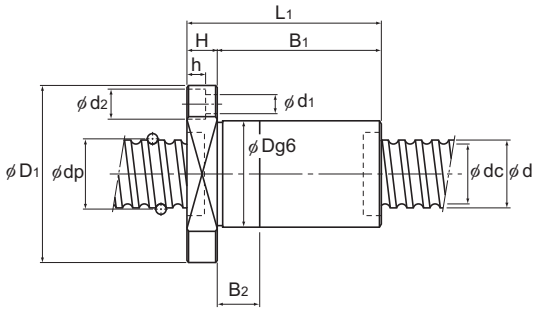

Unit: mm

	Nut dimensions										Screw shaft inertial moment/mm	Nut mass	Shaft mass	Permissible rotational speed
	Outer diameter D	Flange diameter D_1	Overall length L_1	H	B_1	B_2	PCD	$d_1 \times d_2 \times h$	Tw	Lubrication hole A	$kg \cdot m^2/mm$	kg	kg/m	min^{-1}
	43	71	69	12	57	15	57	6.6×11×6.5	55	M6	4.74×10^{-7}	0.61	4.27	2430
	43	71	79	12	67	20	57	6.6×11×6.5	55	M6	4.74×10^{-7}	0.68	4.27	2430
	43	71	73	12	61	15	57	6.6×11×6.5	55	M6	4.74×10^{-7}	0.64	4.36	2410
	45	71	84	15	69	20	57	6.6×11×6.5	55	M6	4.74×10^{-7}	0.82	4.18	2390
	45	76	64	11	53	15	63	6.6×11×6.5	59	M6	8.08×10^{-7}	0.57	5.86	2150
	45	76	72	11	61	15	63	6.6×11×6.5	59	M6	8.08×10^{-7}	0.62	5.86	2150
	45	76	80	11	69	20	63	6.6×11×6.5	59	M6	8.08×10^{-7}	0.66	5.86	2150
	46	76	62	12	50	10	63	6.6×11×6.5	59	M6	8.08×10^{-7}	0.6	5.67	2130
	46	76	73	12	61	15	63	6.6×11×6.5	59	M6	8.08×10^{-7}	0.67	5.67	2130
	48	76	73	12	61	15	63	6.6×11×6.5	59	M6	8.08×10^{-7}	0.74	6.31	2120
	48	76	87	12	75	20	63	6.6×11×6.5	59	M6	8.08×10^{-7}	0.85	6.31	2120
	54	87	110	15	95	25	69	9×14×8.5	66	M6	8.08×10^{-7}	1.57	4.98	2070
	54	87	98	15	83	25	69	9×14×8.5	66	M6	8.08×10^{-7}	1.43	5.2	2070
	58	98	122	18	104	30	77	11×17.5×11	75	M6	1.29×10^{-6}	2.03	6.51	1850
	58	98	143	18	125	35	77	11×17.5×11	75	M6	1.29×10^{-6}	2.3	6.51	1850
	58	98	164	18	146	45	77	11×17.5×11	75	M6	1.29×10^{-6}	2.57	6.51	1850

Note) The overall length of the nut will increase when equipping the QZ lubricating device. See A15-344 for further details.

Options⇒A15-333

DIK
With Preload

DN value	70000

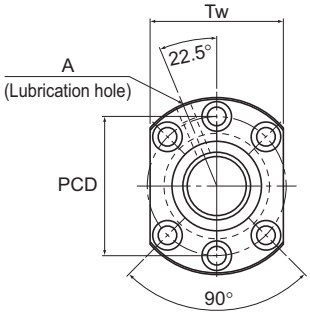

Model No.	Screw shaft outer diameter	Lead	Ball center-to-center diameter	Thread minor diameter	No. of loaded circuits	Basic load rating		Rigidity
						Ca	C₀a	K
	d	Ph	dp	dc	Rows × turns	kN	kN	N/μm
DIK 4010-6	40	10	41.75	34.7	3×1	29.8	69.3	750
DIK 4010-8	40	10	41.75	34.7	4×1	38.1	92.4	1000
DIK 4012-6	40	12	41.75	34.4	3×1	30.6	72.3	790
DIK 4012-8	40	12	41.75	34.4	4×1	39.2	96.4	1030
DIK 4016-4	40	16	41.75	34.4	2×1	21.5	68.4	540
DIK 5010-6	50	10	51.75	44.4	3×1	33.9	90.7	940
DIK 5010-8	50	10	51.75	44.4	4×1	43.4	120.5	1230
DIK 5010-10	50	10	51.75	44.4	5×1	52.5	150.9	1530
DIK 5012-6	50	12	52.25	43.3	3×1	45.8	113	970
DIK 5012-8	50	12	52.25	43.3	4×1	58.6	150.6	1270
DIK 5016-4	50	16	52.25	43.3	2×1	32.3	75.5	660
DIK 5016-6	50	16	52.25	43.3	3×1	45.7	113.3	970
DIK 6310-8	63	10	64.75	57.7	4×1	49.5	160.7	1550
DIK 6312-6	63	12	65.25	56.3	3×1	51.9	147.4	1200
DIK 6312-8	63	12	65.25	56.3	4×1	66.4	196.6	1570

Download data by searching for the corresponding model number on the Technical Support site. https://tech.thk.com

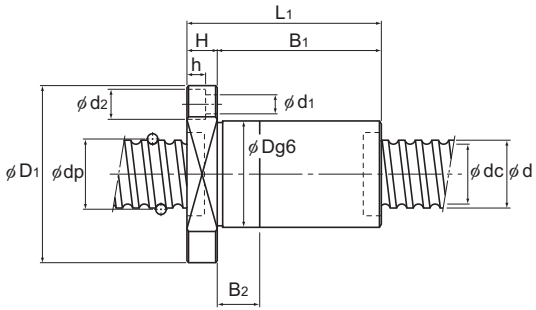

Unit: mm

	Nut dimensions										Screw shaft inertial moment/mm	Nut mass	Shaft mass	Permissible rotational speed
	Outer diameter D	Flange diameter D_1	Overall length L_1	H	B_1	B_2	PCD	$d_1 \times d_2 \times h$	Tw	Lubrication hole A	$kg \cdot m^2/mm$	kg	kg/m	min^{-1}
	62	104	113	18	95	25	82	11×17.5×11	79	Rc1/8 (PT1/8)	1.97×10^{-6}	2.09	8.22	1670
	62	104	137	18	119	35	82	11×17.5×11	79		1.97×10^{-6}	2.42	8.22	1670
	62	104	138	18	120	35	82	11×17.5×11	79		1.97×10^{-6}	2.44	8.5	1670
	62	104	163	18	145	45	82	11×17.5×11	79		1.97×10^{-6}	2.78	8.5	1670
	62	104	120	18	102	30	82	11×17.5×11	79		1.97×10^{-6}	2.19	8.83	1670
	72	123	114	18	96	30	101	11×17.5×11	92		4.82×10^{-6}	2.65	13.38	1350
	72	123	137	18	119	35	101	11×17.5×11	92		4.82×10^{-6}	3.03	13.38	1350
	72	123	160	18	142	45	101	11×17.5×11	92		4.82×10^{-6}	3.41	13.38	1350
	75	129	145	22	123	35	105	14×20×13	98		4.82×10^{-6}	3.83	12.74	1330
	75	129	170	22	148	45	105	14×20×13	98		4.82×10^{-6}	4.31	12.74	1330
	75	129	129	22	107	30	105	14×20×13	98		4.82×10^{-6}	3.52	13.41	1330
	75	129	175	22	153	45	105	14×20×13	98		4.82×10^{-6}	4.41	13.41	1330
	85	146	141	22	119	35	122	14×20×13	110		1.21×10^{-5}	4.16	21.93	1080
	90	146	146	22	124	35	122	14×20×13	110		1.21×10^{-5}	4.93	21.14	1070
	90	146	171	22	149	45	122	14×20×13	110		1.21×10^{-5}	5.56	21.14	1070

Note) The overall length of the nut will increase when equipping the QZ lubricating device. See A15-344 for further details.

Options⇒A15-333

DKN
With Preload

DN value	70000

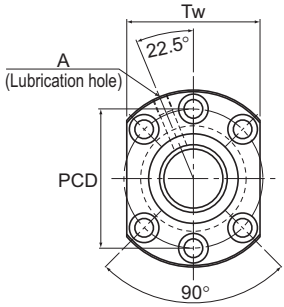

Model No.	Screw shaft outer diameter	Lead	Ball center-to-center diameter	Thread minor diameter	No. of loaded circuits	Basic load rating		Rigidity			
						Ca	C_0a	K	Outer diameter	Flange diameter	Overall length
	d	Ph	dp	dc	Rows × turns	kN	kN	N/μm	D	D_1	L_1
DKN 4020-3	40	20	41.75	34.7	3×1	29.4	69.3	750	62	104	223
DKN 5020-3	50	20	52.25	43.6	3×1	44.2	108.8	930	75	129	243
DKN 6320-3	63	20	65.7	55.9	3×1	83.5	229.3	1470	95	159	243

Download data by searching for the corresponding model number on the Technical Support site. https://tech.thk.com

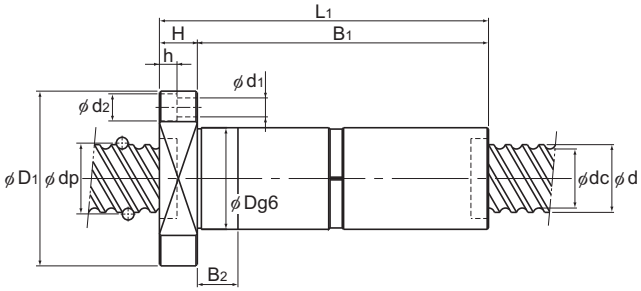

Unit: mm

Nut dimensions								Screw shaft inertial moment/mm	Nut mass	Shaft mass	Permissible rotational speed
	H	B_1	B_2	PCD	$d_1 \times d_2 \times h$	Tw	Lubrication hole A	$kg \cdot m^2/mm$	kg	kg/m	min^{-1}
	18	205	25	82	11×17.5×11	79	Rc1/8 (PT1/8)	1.97×10^{-6}	3.61	9.03	1670
	28	215	30	105	14×20×13	98		4.82×10^{-6}	6.0	13.8	1330
	28	215	30	129	18×26×17.5	121		1.21×10^{-6}	9.5	20.85	1060

Note) The overall length of the nut will increase when equipping the QZ lubricating device. See A15-344 for further details.

BLW
With Preload

DN value	70000

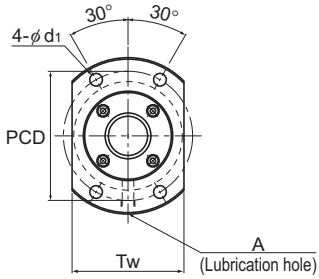

Model No.	Screw shaft outer diameter	Lead	Ball center-to-center diameter	Thread minor diameter	No. of loaded circuits	Basic load rating		Rigidity					
						Ca	C0a	K	Outer diameter	Flange diameter		Overall length	
	d	Ph	dp	dc	Rows X turns	kN	kN	N/μm	D	D1	D2	L1	H
BLW 1510-5.6	15	10	15.75	12.5	2×2.8	14.3	27.8	680	43	64	34	89	10
BLW 1616-3.6	16	16	16.65	13.7	2×1.8	7.1	14.3	440	41	60	32	84.5	10
BLW 2020-3.6	20	20	20.75	17.5	2×1.8	11.1	24.7	570	48	69	39	105	10
BLW 2525-3.6	25	25	26	21.9	2×1.8	16.6	38.7	700	57	82	47	124.5	12
BLW 3232-3.6	32	32	33.25	28.3	2×1.8	23.7	59.5	880	68	99	58	155	15
BLW 3636-3.6	36	36	37.4	31.7	2×1.8	30.8	78	980	79	116	66	181	17
BLW 4040-3.6	40	40	41.75	35.2	2×1.8	38.7	99.2	1090	84	121	73	191	17
BLW 5050-3.6	50	50	52.2	44.1	2×1.8	57.8	155	1340	106	149	90	245	20

Download data by searching for the corresponding model number on the Technical Support site. https://tech.thk.com

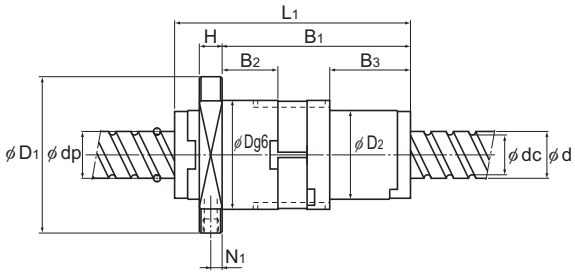

Unit: mm

Nut dimensions								Screw shaft inertial moment/mm	Nut mass	Shaft mass	Permissible rotational speed
	B_1	B_2	B_3	PCD	d_1	Tw	N_1	Lubrication hole A	kg·m²/mm	kg	kg/m	min^{-1}
	69	18.7	28.6	52	5.5	46	5	M6	3.90×10^{-8}	0.81	1.07	4440
	65.5	18.1	27.1	49	4.5	44	6	M6	5.05×10^{-8}	0.67	1.42	4200
	84	25	36	57	5.5	50	5	M6	1.23×10^{-7}	0.54	2.25	3370
	101.5	33	44	68	6.6	60	5	M6	3.01×10^{-7}	0.94	3.52	2690
	127	42.4	55.4	81	9	70	6	M6	8.08×10^{-7}	3.19	5.83	2100
	147.9	49.4	65.4	95	11	82	7	M6	1.29×10^{-6}	5.99	7.34	1870
	158	54.5	70.5	100	11	87	7	M6	1.97×10^{-6}	6.16	9.01	1670
	203.8	70.7	91.7	126	14	108	8	M6	4.82×10^{-6}	9.06	14.08	1340

Note) The overall length of the nut will increase when equipping the QZ lubricating device. See A15-344 for further details.
The Model BLW can be equipped with a brush seal depending on the model number. Contact THK if you would like to use one.

Options⇒A15-333

BNK0401-3 Shaft diameter: 4; lead: 1

DN value	70000

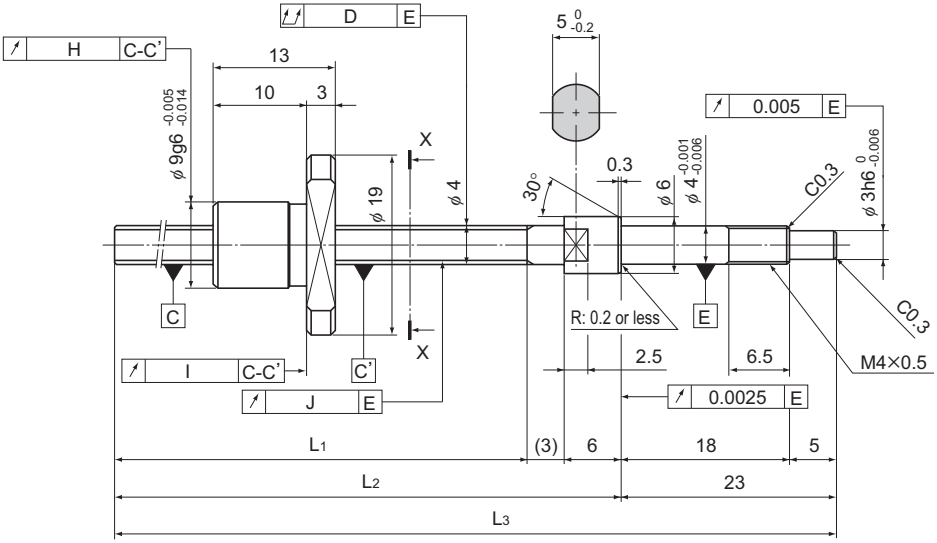

Model No.	Stroke	Screw shaft length		
		L_1	L_2	L_3
BNK 0401-3G0+77LC3Y	20	45	54	77
BNK 0401-3G0+77LC5Y				
BNK 0401-3G2+77LC7Y				
BNK 0401-3G0+97LC3Y	40	65	74	97
BNK 0401-3G0+97LC5Y				
BNK 0401-3G2+97LC7Y				
BNK 0401-3G0+127LC3Y	70	95	104	127
BNK 0401-3G0+127LC5Y				
BNK 0401-3G2+127LC7Y				

Note) A stainless steel type is also available for model BNK0401. When placing an order, add symbol "M" to the end of the model number.

(Example) BNK0401-3G0+77LC3Y M

Symbol for stainless steel type

For accuracy grades C3 and C5, clearance GT is also available as standard.

Download data by searching for the corresponding model number on the Technical Support site. https://tech.thk.com

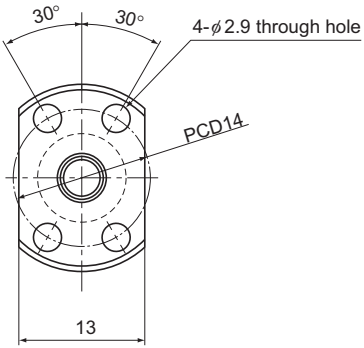

X-X arrow view

Ball Screw Specifications			
Lead (mm)	1		
BCD (mm)	4.15		
Thread minor diameter (mm)	3.4		
Threading direction, No. of threaded grooves	Rightward, 1		
No. of circuits	1 turn × 3 rows		
Clearance symbol	G0	GT	G2
Axial clearance (mm)	0	0.005 or less	0.02 or less
Basic dynamic load rating Ca (kN)	0.29	0.29	0.29
Basic static load rating C_0a (kN)	0.42	0.42	0.42
Preload torque (N·m)	to 9.8×10^{-3}	—	—
Spacer ball	None	None	None
Rigidity value (N/μm)	35		
Circulation method	Deflector		

Unit: mm

	Runout of the screw shaft axis	Runout of the nut circumference	Flange mounting surface runout	Runout of the thread groove surface	Lead angle accuracy		Nut mass	Shaft mass	Permissible rotational speed
					Representative travel distance error	Fluctuation			
	D	H	I	J			kg	kg/m	min^{-1}
	0.015	0.009	0.008	0.008	±0.008	0.008	0.01	0.07	3500
	0.025	0.012	0.01	0.01	±0.018	0.018	0.01	0.07	3500
	0.035	0.02	0.014	0.014	Travel distance: ±0.05/300		0.01	0.07	3500
	0.02	0.009	0.008	0.008	±0.008	0.008	0.01	0.07	3500
	0.025	0.012	0.01	0.01	±0.018	0.018	0.01	0.07	3500
	0.035	0.02	0.014	0.014	Travel distance: ±0.05/300		0.01	0.07	3500
	0.025	0.009	0.008	0.008	±0.008	0.008	0.01	0.07	3500
	0.035	0.012	0.01	0.01	±0.018	0.018	0.01	0.07	3500
	0.05	0.02	0.014	0.014	Travel distance: ±0.05/300		0.01	0.07	3500

Options⇒A15-333

BNK0501-3 Shaft diameter: 5; lead: 1

DN value	70000

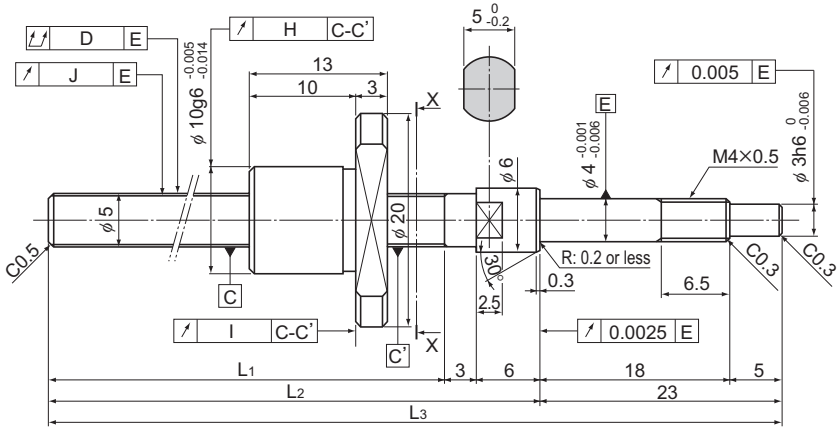

Model No.	Stroke	Screw shaft length		
		L_1	L_2	L_3
BNK 0501-3G0+77LC3Y	20	45	54	77
BNK 0501-3G0+77LC5Y				
BNK 0501-3G2+77LC7Y				
BNK 0501-3G0+97LC3Y	40	65	74	97
BNK 0501-3G0+97LC5Y				
BNK 0501-3G2+97LC7Y				
BNK 0501-3G0+127LC3Y	70	95	104	127
BNK 0501-3G0+127LC5Y				
BNK 0501-3G2+127LC7Y				

Note) A stainless steel type is also available for model BNK0501. When placing an order, add symbol “M” to the end of the model number.

(Example) BNK0501-3G0+77LC3Y M

Symbol for stainless steel type

For accuracy grades C3 and C5, clearance GT is also available as standard.

Download data by searching for the corresponding model number on the Technical Support site. https://tech.thk.com

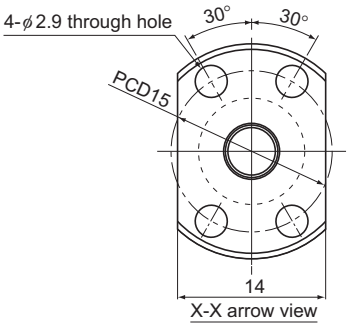

Ball Screw Specifications			
Lead (mm)	1		
BCD (mm)	5.15		
Thread minor diameter (mm)	4.4		
Threading direction, No. of threaded grooves	Rightward, 1		
No. of circuits	1 turn × 3 rows		
Clearance symbol	G0	GT	G2
Axial clearance (mm)	0	0.005 or less	0.02 or less
Basic dynamic load rating Ca (kN)	0.32	0.32	0.32
Basic static load rating C_0a (kN)	0.55	0.55	0.55
Preload torque (N·m)	to 9.8×10^{-3}	—	—
Spacer ball	None	None	None
Rigidity value (N/μm)	47		
Circulation method	Deflector		

Unit: mm

	Runout of the screw shaft axis	Runout of the nut circumference	Flange mounting surface runout	Runout of the thread groove surface	Lead angle accuracy		Nut mass	Shaft mass	Permissible rotational speed
					Representative travel distance error	Fluctuation			
	D	H	I	J			kg	kg/m	min^{-1}
	0.015	0.009	0.008	0.008	±0.008	0.008	0.012	0.11	3500
	0.025	0.012	0.01	0.01	±0.018	0.018	0.012	0.11	3500
	0.035	0.02	0.014	0.014	Travel distance: ±0.05/300		0.012	0.11	3500
	0.02	0.009	0.008	0.008	±0.008	0.008	0.012	0.11	3500
	0.025	0.012	0.01	0.01	±0.018	0.018	0.012	0.11	3500
	0.035	0.02	0.014	0.014	Travel distance: ±0.05/300		0.012	0.11	3500
	0.025	0.009	0.008	0.008	±0.008	0.008	0.012	0.11	3500
	0.035	0.012	0.01	0.01	±0.018	0.018	0.012	0.11	3500
	0.05	0.02	0.014	0.014	Travel distance: ±0.05/300		0.012	0.11	3500

Options⇒A15-333

BNK0601-3 Shaft diameter: 6; lead: 1

DN value	70000

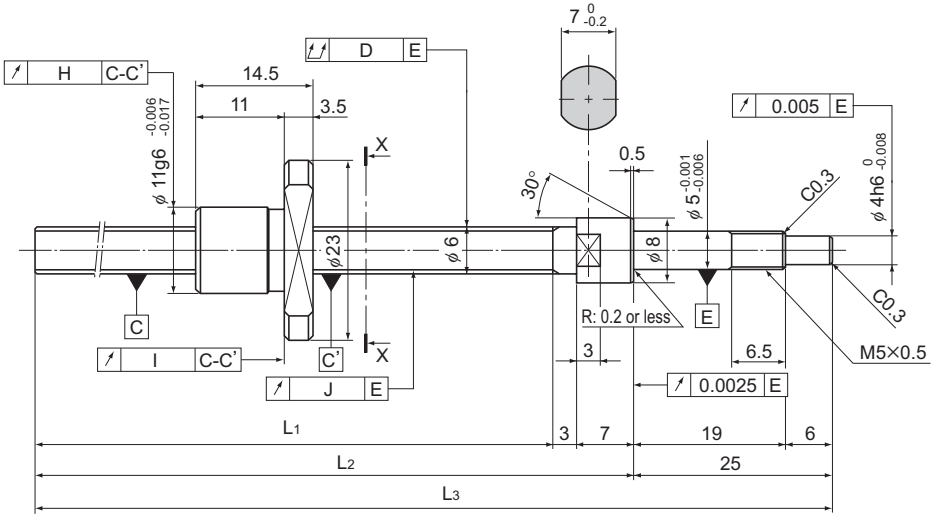

Model No.	Stroke	Screw shaft length		
		L_1	L_2	L_3
BNK 0601-3G0+100LC3Y	40	65	75	100
BNK 0601-3G0+100LC5Y				
BNK 0601-3G2+100LC7Y				
BNK 0601-3G0+130LC3Y	70	95	105	130
BNK 0601-3G0+130LC5Y				
BNK 0601-3G2+130LC7Y				
BNK 0601-3G0+160LC3Y	100	125	135	160
BNK 0601-3G0+160LC5Y				
BNK 0601-3G2+160LC7Y				

Note) A stainless steel type is also available for model BNK0601. When placing an order, add symbol "M" to the end of the model number.

(Example) BNK0601-3G0+100LC3Y M
Symbol for stainless steel type

For accuracy grades C3 and C5, clearance GT is also available as standard.

Download data by searching for the corresponding model number on the Technical Support site. https://tech.thk.com

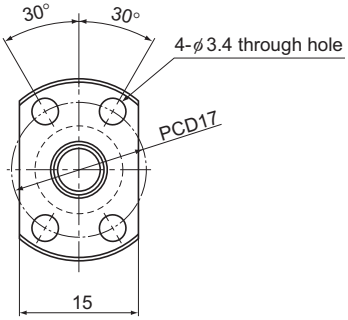

X-X arrow view

Ball Screw Specifications			
Lead (mm)	1		
BCD (mm)	6.2		
Thread minor diameter (mm)	5.3		
Threading direction, No. of threaded grooves	Rightward, 1		
No. of circuits	1 turn × 3 rows		
Clearance symbol	G0	GT	G2
Axial clearance (mm)	0	0.005 or less	0.02 or less
Basic dynamic load rating Ca (kN)	0.54	0.54	0.54
Basic static load rating C_0a (kN)	0.94	0.94	0.94
Preload torque (N·m)	to 1.3×10^{-2}	—	—
Spacer ball	None	None	None
Rigidity value (N/μm)	60		
Circulation method	Deflector		

Unit: mm

	Runout of the screw shaft axis	Runout of the nut circumference	Flange mounting surface runout	Runout of the thread groove surface	Lead angle accuracy		Nut mass	Shaft mass	Permissible rotational speed
					Representative travel distance error	Fluctuation			
	D	H	I	J			kg	kg/m	min^{-1}
	0.015	0.009	0.008	0.008	±0.008	0.008	0.017	0.14	3500
	0.025	0.012	0.01	0.01	±0.018	0.018	0.017	0.14	3500
	0.035	0.02	0.014	0.014	Travel distance: ±0.05/300		0.017	0.14	3500
	0.02	0.009	0.008	0.008	±0.008	0.008	0.017	0.14	3500
	0.035	0.012	0.01	0.01	±0.018	0.018	0.017	0.14	3500
	0.05	0.02	0.014	0.014	Travel distance: ±0.05/300		0.017	0.14	3500
	0.025	0.009	0.008	0.008	±0.01	0.008	0.017	0.14	3500
	0.035	0.012	0.01	0.01	±0.02	0.018	0.017	0.14	3500
	0.05	0.02	0.014	0.014	Travel distance: ±0.05/300		0.017	0.14	3500

Options⇒A15-333

BNK0801-3 Shaft diameter: 8; lead: 1

DN value	70000

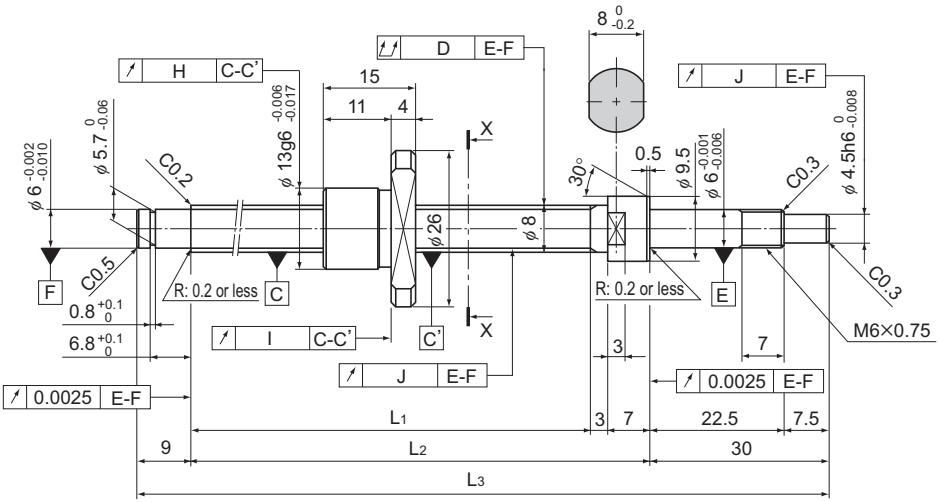

Model No.	Stroke	Screw shaft length		
		L_1	L_2	L_3
BNK 0801-3G0+115LC3Y	40	66	76	115
BNK 0801-3G0+115LC5Y				
BNK 0801-3G2+115LC7Y				
BNK 0801-3G0+145LC3Y	70	96	106	145
BNK 0801-3G0+145LC5Y				
BNK 0801-3G2+145LC7Y				
BNK 0801-3G0+175LC3Y	100	126	136	175
BNK 0801-3G0+175LC5Y				
BNK 0801-3G2+175LC7Y				
BNK 0801-3G0+225LC3Y	150	176	186	225
BNK 0801-3G0+225LC5Y				
BNK 0801-3G2+225LC7Y				

Note) A stainless steel type is also available for model BNK0801. When placing an order, add symbol “M” to the end of the model number.

(Example) BNK0801-3G0+115LC3Y M

Symbol for stainless steel type

For accuracy grades C3 and C5, clearance GT is also available as standard.

Download data by searching for the corresponding model number on the Technical Support site. https://tech.thk.com

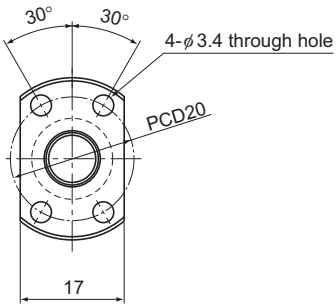

X-X arrow view

Ball Screw Specifications			
Lead (mm)	1		
BCD (mm)	8.2		
Thread minor diameter (mm)	7.3		
Threading direction, No. of threaded grooves	Rightward, 1		
No. of circuits	1 turn × 3 rows		
Clearance symbol	G0	GT	G2
Axial clearance (mm)	0	0.005 or less	0.02 or less
Basic dynamic load rating Ca (kN)	0.64	0.64	0.64
Basic static load rating C_0a (kN)	1.4	1.4	1.4
Preload torque (N·m)	to 1.8×10^{-2}	—	—
Spacer ball	None	None	None
Rigidity value (N/μm)	80		
Circulation method	Deflector		

Unit: mm

	Runout of the screw shaft axis	Runout of the nut circumference	Flange mounting surface runout	Runout of the thread groove surface	Lead angle accuracy		Nut mass	Shaft mass	Permissible rotational speed
					Representative travel distance error	Fluctuation			
	D	H	I	J			kg	kg/m	min^{-1}
	0.025	0.009	0.008	0.008	±0.008	0.008	0.024	0.29	3500
	0.025	0.012	0.01	0.01	±0.018	0.018	0.024	0.29	3500
	0.035	0.02	0.014	0.014	Travel distance: ±0.05/300		0.024	0.29	3500
	0.03	0.009	0.008	0.008	±0.008	0.008	0.024	0.29	3500
	0.035	0.012	0.01	0.01	±0.018	0.018	0.024	0.29	3500
	0.05	0.02	0.014	0.014	Travel distance: ±0.05/300		0.024	0.29	3500
	0.03	0.009	0.008	0.008	±0.01	0.008	0.024	0.29	3500
	0.035	0.012	0.01	0.01	±0.02	0.018	0.024	0.29	3500
	0.05	0.02	0.014	0.014	Travel distance: ±0.05/300		0.024	0.29	3500
	0.035	0.009	0.008	0.008	±0.01	0.008	0.024	0.29	3500
	0.05	0.012	0.01	0.01	±0.02	0.018	0.024	0.29	3500
	0.065	0.02	0.014	0.014	Travel distance: ±0.05/300		0.024	0.29	3500

Options⇒A15-333

BNK0802-3 Shaft diameter: 8; lead: 2

DN value	70000

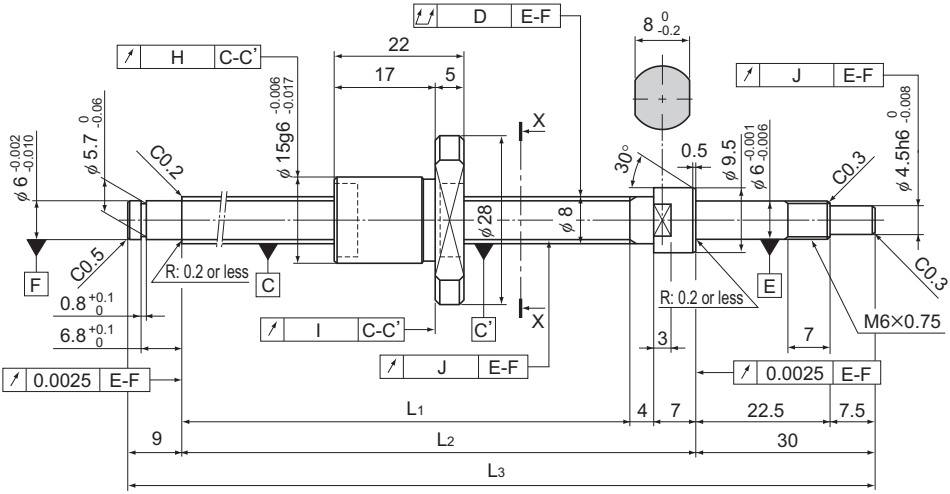

Model No.	Stroke	Screw shaft length		
		L_1	L_2	L_3
BNK 0802-3RRG0+125LC3Y	40	75	86	125
BNK 0802-3RRG0+125LC5Y				
BNK 0802-3RRG2+125LC7Y				
BNK 0802-3RRG0+155LC3Y	70	105	116	155
BNK 0802-3RRG0+155LC5Y				
BNK 0802-3RRG2+155LC7Y				
BNK 0802-3RRG0+185LC3Y	100	135	146	185
BNK 0802-3RRG0+185LC5Y				
BNK 0802-3RRG2+185LC7Y				
BNK 0802-3RRG0+235LC3Y	150	185	196	235
BNK 0802-3RRG0+235LC5Y				
BNK 0802-3RRG2+235LC7Y				

Note) A stainless steel type is also available for model BNK0802. When placing an order, add symbol “M” to the end of the model number.

(Example) BNK0802-3RRG0+125LC3Y M

Symbol for stainless steel type

For accuracy grades C3 and C5, clearance GT is also available as standard.

Download data by searching for the corresponding model number on the Technical Support site. https://tech.thk.com

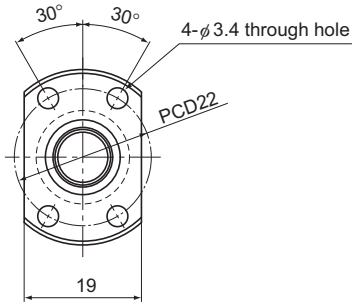

X-X arrow view

Ball Screw Specifications			
Lead (mm)	2		
BCD (mm)	8.3		
Thread minor diameter (mm)	7		
Threading direction, No. of threaded grooves	Rightward, 1		
No. of circuits	1 turn × 3 rows		
Clearance symbol	G0	GT	G2
Axial clearance (mm)	0	0.005 or less	0.02 or less
Basic dynamic load rating Ca (kN)	1.4	1.4	1.4
Basic static load rating C_0a (kN)	2.3	2.3	2.3
Preload torque (N·m)	to 2×10^{-2}	—	—
Spacer ball	None	None	None
Rigidity value (N/μm)	100		
Circulation method	Deflector		

Unit: mm

	Runout of the screw shaft axis	Runout of the nut circumference	Flange mounting surface runout	Runout of the thread groove surface	Lead angle accuracy		Nut mass	Shaft mass	Permissible rotational speed
					Representative travel distance error	Fluctuation			
	D	H	I	J			kg	kg/m	min^{-1}
	0.025	0.009	0.008	0.008	±0.008	0.008	0.034	0.27	3500
	0.025	0.012	0.01	0.01	±0.018	0.018	0.034	0.27	3500
	0.035	0.02	0.014	0.014	Travel distance: ±0.05/300		0.034	0.27	3500
	0.03	0.009	0.008	0.008	±0.01	0.008	0.034	0.27	3500
	0.035	0.012	0.01	0.01	±0.02	0.018	0.034	0.27	3500
	0.05	0.02	0.014	0.014	Travel distance: ±0.05/300		0.034	0.27	3500
	0.03	0.009	0.008	0.008	±0.01	0.008	0.034	0.27	3500
	0.035	0.012	0.01	0.01	±0.02	0.018	0.034	0.27	3500
	0.05	0.02	0.014	0.014	Travel distance: ±0.05/300		0.034	0.27	3500
	0.035	0.009	0.008	0.008	±0.01	0.008	0.034	0.27	3500
	0.05	0.012	0.01	0.01	±0.02	0.018	0.034	0.27	3500
	0.065	0.02	0.014	0.014	Travel distance: ±0.05/300		0.034	0.27	3500

Options⇒A15-333

BNK0810-3 Shaft diameter: 8; lead: 10

DN value	70000

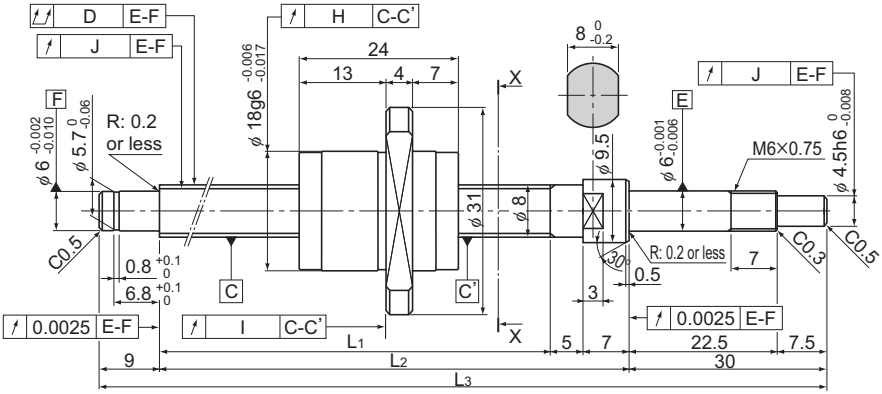

Model No.	Stroke	Screw shaft length		
		L_1	L_2	L_3
BNK 0810-3GT+205LC5Y	100	154	166	205
BNK 0810-3G2+205LC7Y				
BNK 0810-3GT+255LC5Y	150	204	216	255
BNK 0810-3G2+255LC7Y				
BNK 0810-3GT+305LC5Y	200	254	266	305
BNK 0810-3G2+305LC7Y				
BNK 0810-3GT+355LC5Y	250	304	316	355
BNK 0810-3G2+355LC7Y				
BNK 0810-3GT+405LC5Y	300	354	366	405
BNK 0810-3G2+405LC7Y				

Download data by searching for the corresponding model number on the Technical Support site. https://tech.thk.com

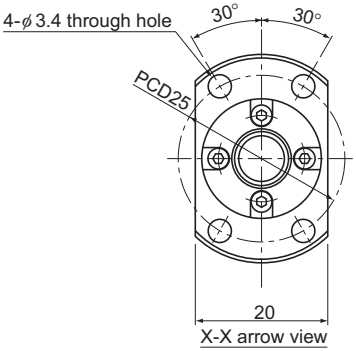

Ball Screw Specifications		
Lead (mm)	10	
BCD (mm)	8.4	
Thread minor diameter (mm)	6.7	
Threading direction, No. of threaded grooves	Rightward, 2	
No. of circuits	1.5 turns × 2 rows	
Clearance symbol	GT	G2
Axial clearance (mm)	0.005 or less	0.02 or less
Basic dynamic load rating Ca (kN)	2.16	2.16
Basic static load rating C₀a (kN)	3.82	3.82
Preload torque (N·m)	—	—
Spacer ball	None	None
Rigidity value (N/μm)	100	
Circulation method	End cap	

Unit: mm

	Runout of the screw shaft axis D	Runout of the nut circumference H	Flange mounting surface runout I	Runout of the thread groove surface J	Lead angle accuracy: Representative travel distance error	Lead angle accuracy: Fluctuation	Nut mass kg	Shaft mass kg/m	Permissible rotational speed min^{-1}
	0.05	0.012	0.01	0.01	±0.02	0.018	0.049	0.30	3500
	0.065	0.02	0.014	0.014	Travel distance: ±0.05/300		0.049	0.30	3500
	0.05	0.012	0.01	0.01	±0.023	0.018	0.049	0.30	3500
	0.065	0.02	0.014	0.014	Travel distance: ±0.05/300		0.049	0.30	3500
	0.05	0.012	0.01	0.01	±0.023	0.018	0.049	0.30	3500
	0.065	0.02	0.014	0.014	Travel distance: ±0.05/300		0.049	0.30	3500
	0.06	0.012	0.01	0.01	±0.023	0.018	0.049	0.30	3500
	0.075	0.02	0.014	0.014	Travel distance: ±0.05/300		0.049	0.30	3500
	0.07	0.012	0.01	0.01	±0.025	0.018	0.049	0.30	3500
	0.09	0.02	0.014	0.014	Travel distance: ±0.05/300		0.049	0.30	3500

Options⇒A15-333

BNK1002-3 Shaft diameter: 10; lead: 2

DN value	70000

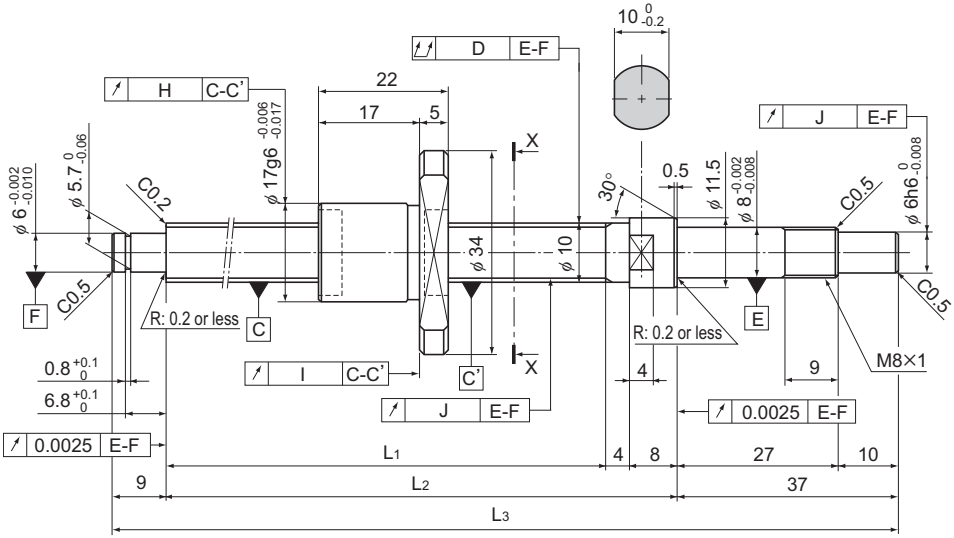

Model No.	Stroke	Screw shaft length		
		L_1	L_2	L_3
BNK 1002-3RRG0+143LC3Y	50	85	97	143
BNK 1002-3RRG0+143LC5Y				
BNK 1002-3RRG2+143LC7Y				
BNK 1002-3RRG0+193LC3Y	100	135	147	193
BNK 1002-3RRG0+193LC5Y				
BNK 1002-3RRG2+193LC7Y				
BNK 1002-3RRG0+243LC3Y	150	185	197	243
BNK 1002-3RRG0+243LC5Y				
BNK 1002-3RRG2+243LC7Y				
BNK 1002-3RRG0+293LC3Y	200	235	247	293
BNK 1002-3RRG0+293LC5Y				
BNK 1002-3RRG2+293LC7Y				

Note) A stainless steel type is also available for model BNK1002. When placing an order, add symbol “M” to the end of the model number.

(Example) BNK1002-3RRG0+143LC3Y M

Symbol for stainless steel type

For accuracy grades C3 and C5, clearance GT is also available as standard.

Download data by searching for the corresponding model number on the Technical Support site. https://tech.thk.com

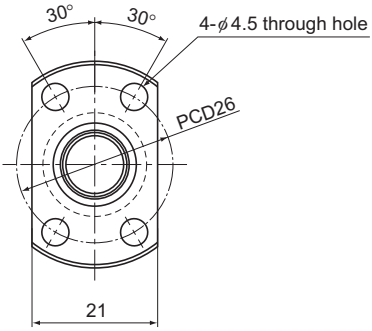

X-X arrow view

Ball Screw Specifications			
Lead (mm)	2		
BCD (mm)	10.3		
Thread minor diameter (mm)	9		
Threading direction, No. of threaded grooves	Rightward, 1		
No. of circuits	1 turn × 3 rows		
Clearance symbol	G0	GT	G2
Axial clearance (mm)	0	0.005 or less	0.02 or less
Basic dynamic load rating Ca (kN)	1.5	1.5	1.5
Basic static load rating C_0a (kN)	2.9	2.9	2.9
Preload torque (N·m)	to 2.5×10^{-2}	—	—
Spacer ball	None	None	None
Rigidity value (N/μm)	100		
Circulation method	Deflector		

Unit: mm

	Runout of the screw shaft axis	Runout of the nut circumference	Flange mounting surface runout	Runout of the thread groove surface	Lead angle accuracy		Nut mass	Shaft mass	Permissible rotational speed
					Representative travel distance error	Fluctuation			
	D	H	I	J			kg	kg/m	min^{-1}
	0.02	0.009	0.008	0.007	±0.008	0.008	0.045	0.47	3500
	0.035	0.012	0.01	0.011	±0.018	0.018	0.045	0.47	3500
	0.04	0.02	0.014	0.014	Travel distance: ±0.05/300		0.045	0.47	3500
	0.03	0.009	0.008	0.007	±0.01	0.008	0.045	0.47	3500
	0.035	0.012	0.01	0.011	±0.02	0.018	0.045	0.47	3500
	0.04	0.02	0.014	0.014	Travel distance: ±0.05/300		0.045	0.47	3500
	0.03	0.009	0.008	0.007	±0.01	0.008	0.045	0.47	3500
	0.04	0.012	0.01	0.011	±0.02	0.018	0.045	0.47	3500
	0.055	0.02	0.014	0.014	Travel distance: ±0.05/300		0.045	0.47	3500
	0.03	0.009	0.008	0.007	±0.012	0.008	0.045	0.47	3500
	0.04	0.012	0.01	0.011	±0.023	0.018	0.045	0.47	3500
	0.055	0.02	0.014	0.014	Travel distance: ±0.05/300		0.045	0.47	3500

Options⇒A15-333

BNK1004-2.5 Shaft diameter: 10; lead: 4

DN value	70000

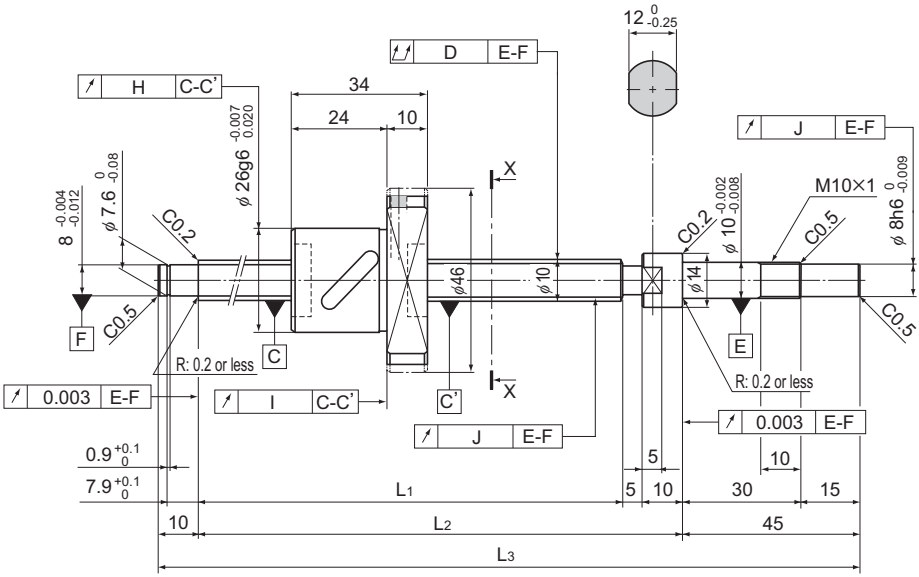

Model No.	Stroke	Screw shaft length		
		L_1	L_2	L_3
BNK 1004-2.5RRG0+180LC3Y	50	110	125	180
BNK 1004-2.5RRG0+180LC5Y				
BNK 1004-2.5RRG2+180LC7Y				
BNK 1004-2.5RRG0+230LC3Y	100	160	175	230
BNK 1004-2.5RRG0+230LC5Y				
BNK 1004-2.5RRG2+230LC7Y				
BNK 1004-2.5RRG0+280LC3Y	150	210	225	280
BNK 1004-2.5RRG0+280LC5Y				
BNK 1004-2.5RRG2+280LC7Y				
BNK 1004-2.5RRG0+330LC3Y	200	260	275	330
BNK 1004-2.5RRG0+330LC5Y				
BNK 1004-2.5RRG2+330LC7Y				
BNK 1004-2.5RRG0+380LC3Y	250	310	325	380
BNK 1004-2.5RRG0+380LC5Y				
BNK 1004-2.5RRG2+380LC7Y				

Note) For accuracy grades C3 and C5, clearance GT is also available as standard.

Download data by searching for the corresponding model number on the Technical Support site. https://tech.thk.com

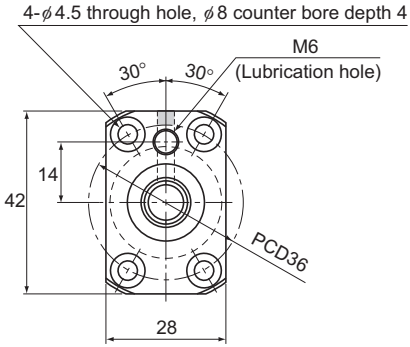

X-X arrow view

Ball Screw Specifications			
Lead (mm)	4		
BCD (mm)	10.5		
Thread minor diameter (mm)	7.8		
Threading direction, No. of threaded grooves	Rightward, 1		
No. of circuits	2.5 turns × 1 row		
Clearance symbol	G0	GT	G2
Axial clearance (mm)	0	0.005 or less	0.02 or less
Basic dynamic load rating Ca (kN)	2.1	3.4	3.4
Basic static load rating C_0a (kN)	2.7	5.4	5.4
Preload torque (N·m)	9.8×10^{-3} to 4.9×10^{-2}	—	—
Spacer ball	1 : 1	None	None
Rigidity value (N/μm)	50	100	
Circulation method	Return pipe		

Unit: mm

	Runout of the screw shaft axis	Runout of the nut circumference	Flange mounting surface runout	Runout of the thread groove surface	Lead angle accuracy		Nut mass	Shaft mass	Permissible rotational speed
					Representative travel distance error	Fluctuation			
	D	H	I	J			kg	kg/m	min^{-1}
	0.02	0.009	0.008	0.008	±0.01	0.008	0.15	0.32	5000
	0.035	0.012	0.01	0.011	±0.02	0.018	0.15	0.32	5000
	0.04	0.02	0.014	0.014	Travel distance: ±0.05/300		0.15	0.32	5000
	0.03	0.009	0.008	0.008	±0.01	0.008	0.15	0.32	5000
	0.04	0.012	0.01	0.011	±0.02	0.018	0.15	0.32	5000
	0.055	0.02	0.014	0.014	Travel distance: ±0.05/300		0.15	0.32	5000
	0.03	0.009	0.008	0.008	±0.012	0.008	0.15	0.32	5000
	0.04	0.012	0.01	0.011	±0.023	0.018	0.15	0.32	5000
	0.055	0.02	0.014	0.014	Travel distance: ±0.05/300		0.15	0.32	5000
	0.04	0.009	0.008	0.008	±0.012	0.008	0.15	0.32	5000
	0.05	0.012	0.01	0.011	±0.023	0.018	0.15	0.32	5000
	0.065	0.02	0.014	0.014	Travel distance: ±0.05/300		0.15	0.32	5000
	0.04	0.009	0.008	0.008	±0.012	0.008	0.15	0.32	5000
	0.05	0.012	0.01	0.011	±0.023	0.018	0.15	0.32	5000
	0.065	0.02	0.014	0.014	Travel distance: ±0.05/300		0.15	0.32	5000

Options⇒A15-333

BNK1010-1.5 Shaft diameter: 10; lead: 10

DN value	70000

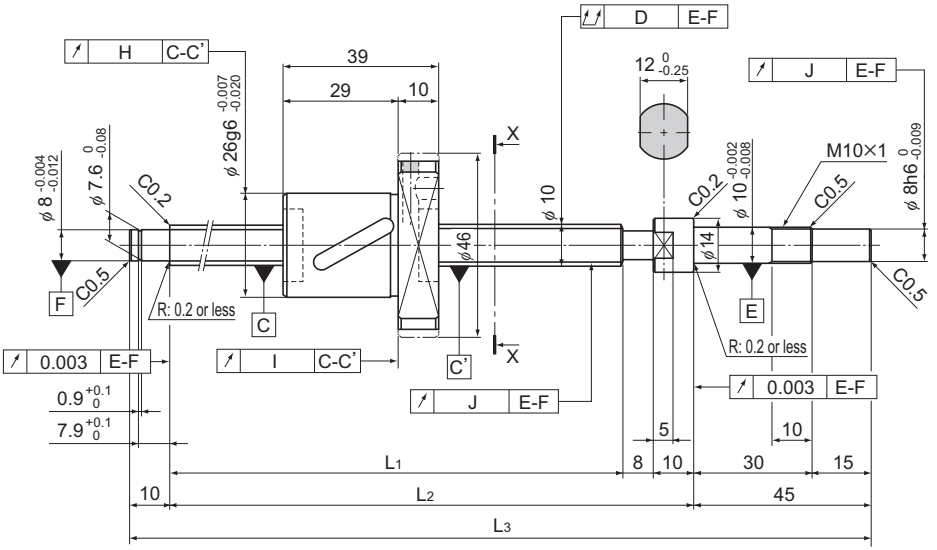

Model No.	Stroke	Screw shaft length		
		L_1	L_2	L_3
BNK 1010-1.5RRG0+240LC5Y	100	167	185	240
BNK 1010-1.5RRG2+240LC7Y				
BNK 1010-1.5RRG0+290LC5Y	150	217	235	290
BNK 1010-1.5RRG2+290LC7Y				
BNK 1010-1.5RRG0+340LC5Y	200	267	285	340
BNK 1010-1.5RRG2+340LC7Y				
BNK 1010-1.5RRG0+390LC5Y	250	317	335	390
BNK 1010-1.5RRG2+390LC7Y				
BNK 1010-1.5RRG0+440LC5Y	300	367	385	440
BNK 1010-1.5RRG2+440LC7Y				

Note) For accuracy grade C5, clearance GT is also standardized.

Download data by searching for the corresponding model number on the Technical Support site. https://tech.thk.com

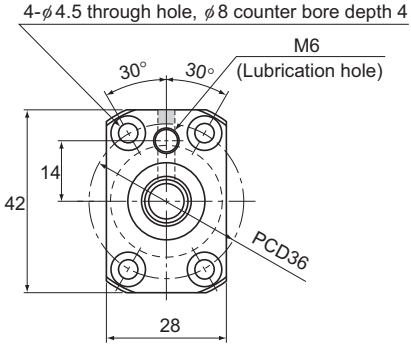

X-X arrow view

Ball Screw Specifications			
Lead (mm)	10		
BCD (mm)	10.5		
Thread minor diameter (mm)	7.8		
Threading direction, No. of threaded grooves	Rightward, 1		
No. of circuits	1.5 turns × 1 row		
Clearance symbol	G0	GT	G2
Axial clearance (mm)	0	0.005 or less	0.02 or less
Basic dynamic load rating Ca (kN)	1.3	2.1	2.1
Basic static load rating C_0a (kN)	1.6	3.1	3.1
Preload torque (N·m)	9.8×10^{-3} to 4.9×10^{-2}	—	—
Spacer ball	1 : 1	None	None
Rigidity value (N/μm)	70	140	
Circulation method	Return pipe		

Unit: mm

	Runout of the screw shaft axis	Runout of the nut circumference	Flange mounting surface runout	Runout of the thread groove surface	Lead angle accuracy		Nut mass	Shaft mass	Permissible rotational speed
					Representative travel distance error	Fluctuation			
	D	H	I	J			kg	kg/m	min^{-1}
	0.04	0.012	0.01	0.011	±0.02	0.018	0.17	0.5	5000
	0.055	0.02	0.014	0.014	Travel distance: ±0.05/300		0.17	0.5	5000
	0.04	0.012	0.01	0.011	±0.023	0.018	0.17	0.5	5000
	0.055	0.02	0.014	0.014	Travel distance: ±0.05/300		0.17	0.5	5000
	0.05	0.012	0.01	0.011	±0.023	0.018	0.17	0.5	5000
	0.065	0.02	0.014	0.014	Travel distance: ±0.05/300		0.17	0.5	5000
	0.05	0.012	0.01	0.011	±0.025	0.02	0.17	0.5	5000
	0.065	0.02	0.014	0.014	Travel distance: ±0.05/300		0.17	0.5	5000
	0.065	0.012	0.01	0.011	±0.025	0.02	0.17	0.5	5000
	0.08	0.02	0.014	0.014	Travel distance: ±0.05/300		0.17	0.5	5000

Options⇒A15-333

BNK1202-3 Shaft diameter: 12; lead: 2

DN value	70000

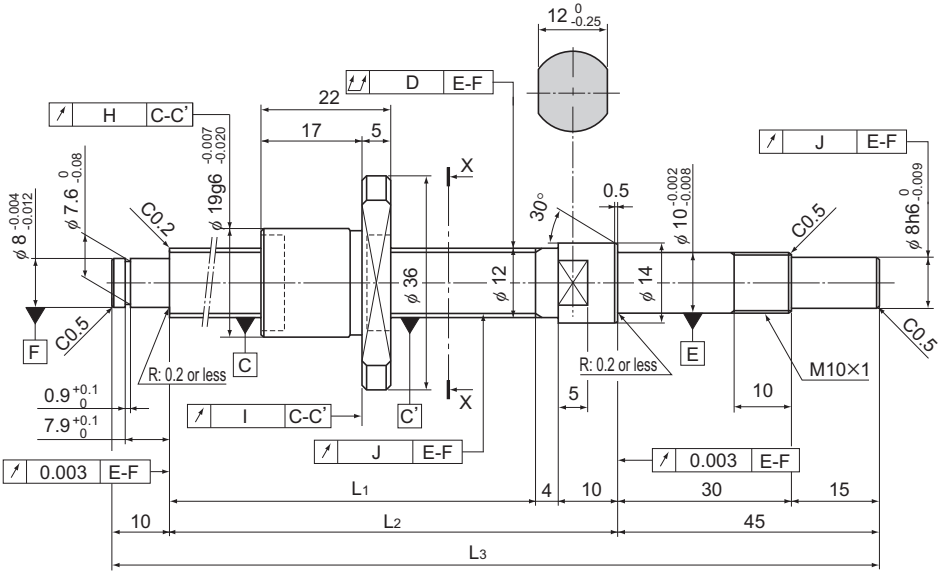

Model No.	Stroke	Screw shaft length		
		L_1	L_2	L_3
BNK 1202-3RRG0+154LC3Y	50	85	99	154
BNK 1202-3RRG0+154LC5Y				
BNK 1202-3RRG2+154LC7Y				
BNK 1202-3RRG0+204LC3Y	100	135	149	204
BNK 1202-3RRG0+204LC5Y				
BNK 1202-3RRG2+204LC7Y				
BNK 1202-3RRG0+254LC3Y	150	185	199	254
BNK 1202-3RRG0+254LC5Y				
BNK 1202-3RRG2+254LC7Y				
BNK 1202-3RRG0+304LC3Y	200	235	249	304
BNK 1202-3RRG0+304LC5Y				
BNK 1202-3RRG2+304LC7Y				
BNK 1202-3RRG0+354LC3Y	250	285	299	354
BNK 1202-3RRG0+354LC5Y				
BNK 1202-3RRG2+354LC7Y				

Note) A stainless steel type is also available for model BNK1202. When placing an order, add symbol "M" to the end of the model number.

(Example) BNK1202-3RRG0+154LC3Y M

Symbol for stainless steel type

For accuracy grades C3 and C5, clearance GT is also available as standard.

Download data by searching for the corresponding model number on the Technical Support site. https://tech.thk.com

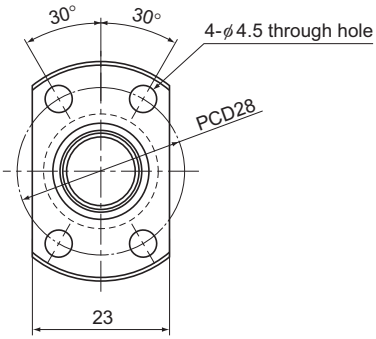

X-X arrow view

Ball Screw Specifications			
Lead (mm)	2		
BCD (mm)	12.3		
Thread minor diameter (mm)	11		
Threading direction, No. of threaded grooves	Rightward, 1		
No. of circuits	1 turn × 3 rows		
Clearance symbol	G0	GT	G2
Axial clearance (mm)	0	0.005 or less	0.02 or less
Basic dynamic load rating Ca (kN)	1.7	1.7	1.7
Basic static load rating C_0a (kN)	3.6	3.6	3.6
Preload torque (N·m)	4.0×10^{-3} to 3.4×10^{-2}	—	—
Spacer ball	None	None	None
Rigidity value (N/μm)	120		
Circulation method	Deflector		

Unit: mm

	Runout of the screw shaft axis	Runout of the nut circumference	Flange mounting surface runout	Runout of the thread groove surface	Lead angle accuracy		Nut mass	Shaft mass	Permissible rotational speed
					Representative travel distance error	Fluctuation			
	D	H	I	J			kg	kg/m	min^{-1}
	0.02	0.01	0.008	0.007	±0.008	0.008	0.05	0.71	3500
	0.035	0.012	0.01	0.011	±0.018	0.018	0.05	0.71	3500
	0.04	0.02	0.014	0.014	Travel distance: ±0.05/300		0.05	0.71	3500
	0.03	0.01	0.008	0.007	±0.01	0.008	0.05	0.71	3500
	0.04	0.012	0.01	0.011	±0.02	0.018	0.05	0.71	3500
	0.055	0.02	0.014	0.014	Travel distance: ±0.05/300		0.05	0.71	3500
	0.03	0.01	0.008	0.007	±0.01	0.008	0.05	0.71	3500
	0.04	0.012	0.01	0.011	±0.02	0.018	0.05	0.71	3500
	0.055	0.02	0.014	0.014	Travel distance: ±0.05/300		0.05	0.71	3500
	0.04	0.01	0.008	0.007	±0.012	0.008	0.05	0.71	3500
	0.05	0.012	0.01	0.011	±0.023	0.018	0.05	0.71	3500
	0.055	0.02	0.014	0.014	Travel distance: ±0.05/300		0.05	0.71	3500
	0.04	0.01	0.008	0.007	±0.012	0.008	0.05	0.71	3500
	0.05	0.012	0.01	0.011	±0.023	0.018	0.05	0.71	3500
	0.065	0.02	0.014	0.014	Travel distance: ±0.05/300		0.05	0.71	3500

Options⇒A15-333

BNK1205-2.5 Shaft diameter: 12; lead: 5

DN value	70000

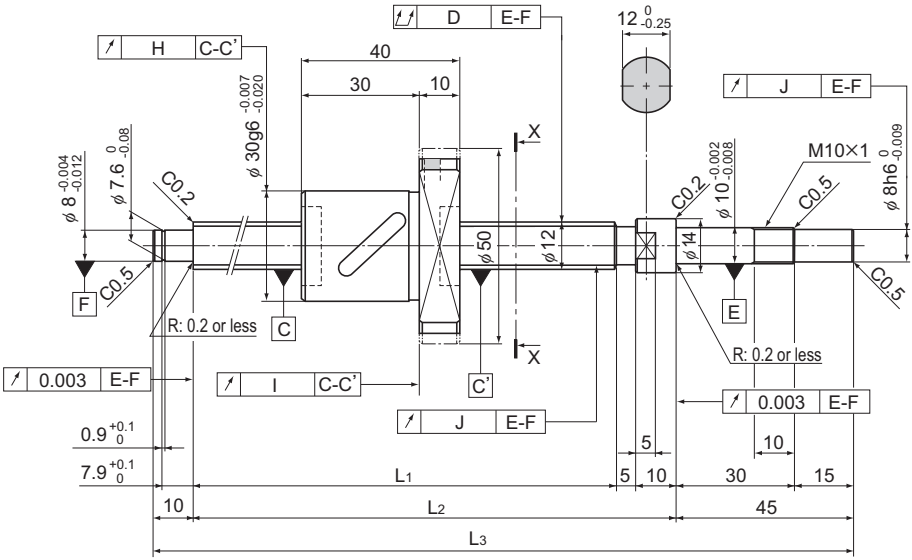

Model No.	Stroke	Screw shaft length		
		L_1	L_2	L_3
BNK 1205-2.5RRG0+180LC3Y	50	110	125	180
BNK 1205-2.5RRG0+180LC5Y				
BNK 1205-2.5RRG2+180LC7Y				
BNK 1205-2.5RRG0+230LC3Y	100	160	175	230
BNK 1205-2.5RRG0+230LC5Y				
BNK 1205-2.5RRG2+230LC7Y				
BNK 1205-2.5RRG0+280LC3Y	150	210	225	280
BNK 1205-2.5RRG0+280LC5Y				
BNK 1205-2.5RRG2+280LC7Y				
BNK 1205-2.5RRG0+330LC3Y	200	260	275	330
BNK 1205-2.5RRG0+330LC5Y				
BNK 1205-2.5RRG2+330LC7Y				
BNK 1205-2.5RRG0+380LC3Y	250	310	325	380
BNK 1205-2.5RRG0+380LC5Y				
BNK 1205-2.5RRG2+380LC7Y				

Note) For accuracy grades C3 and C5, clearance GT is also available as standard.

Download data by searching for the corresponding model number on the Technical Support site. https://tech.thk.com

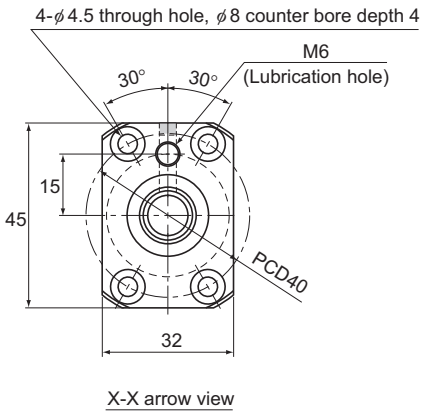

Ball Screw Specifications			
Lead (mm)	5		
BCD (mm)	12.3		
Thread minor diameter (mm)	9.6		
Threading direction, No. of threaded grooves	Rightward, 1		
No. of circuits	2.5 turns × 1 row		
Clearance symbol	G0	GT	G2
Axial clearance (mm)	0	0.005 or less	0.02 or less
Basic dynamic load rating Ca (kN)	2.3	3.7	3.7
Basic static load rating C_0a (kN)	3.2	6.4	6.4
Preload torque (N·m)	9.8×10^{-3} to 4.9×10^{-2}	—	—
Spacer ball	1 : 1	None	None
Rigidity value (N/μm)	60	120	
Circulation method	Return pipe		

Unit: mm

	Runout of the screw shaft axis	Runout of the nut circumference	Flange mounting surface runout	Runout of the thread groove surface	Lead angle accuracy		Nut mass	Shaft mass	Permissible rotational speed
					Representative travel distance error	Fluctuation			
	D	H	I	J			kg	kg/m	min^{-1}
	0.02	0.009	0.008	0.008	±0.01	0.008	0.22	0.61	5000
	0.035	0.012	0.01	0.011	±0.02	0.018	0.22	0.61	5000
	0.04	0.02	0.014	0.014	Travel distance: ±0.05/300		0.22	0.61	5000
	0.03	0.009	0.008	0.008	±0.01	0.008	0.22	0.61	5000
	0.04	0.012	0.01	0.011	±0.02	0.018	0.22	0.61	5000
	0.055	0.02	0.014	0.014	Travel distance: ±0.05/300		0.22	0.61	5000
	0.03	0.009	0.008	0.008	±0.012	0.008	0.22	0.61	5000
	0.04	0.012	0.01	0.011	±0.023	0.018	0.22	0.61	5000
	0.055	0.02	0.014	0.014	Travel distance: ±0.05/300		0.22	0.61	5000
	0.04	0.009	0.008	0.008	±0.012	0.008	0.22	0.61	5000
	0.05	0.012	0.01	0.011	±0.023	0.018	0.22	0.61	5000
	0.065	0.02	0.014	0.014	Travel distance: ±0.05/300		0.22	0.61	5000
	0.04	0.009	0.008	0.008	±0.012	0.008	0.22	0.61	5000
	0.05	0.012	0.01	0.011	±0.023	0.018	0.22	0.61	5000
	0.065	0.02	0.014	0.014	Travel distance: ±0.05/300		0.22	0.61	5000

Options⇒A15-333

BNK1208-2.6 Shaft diameter: 12; lead: 8

DN value	70000

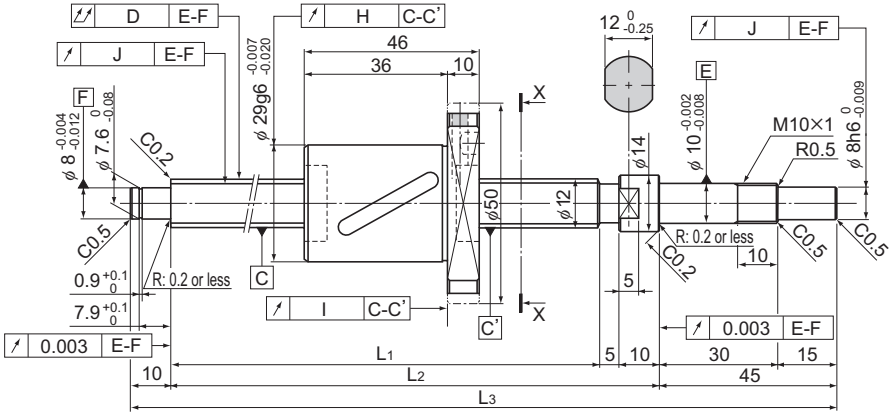

Model No.	Stroke	Screw shaft length		
		L_1	L_2	L_3
BNK 1208-2.6RRG2+180LC7Y	50	110	125	180
BNK 1208-2.6RRG2+230LC7Y	100	160	175	230
BNK 1208-2.6RRG2+280LC7Y	150	210	225	280
BNK 1208-2.6RRG2+330LC7Y	200	260	275	330
BNK 1208-2.6RRG2+380LC7Y	250	310	325	380

Download data by searching for the corresponding model number on the Technical Support site. https://tech.thk.com

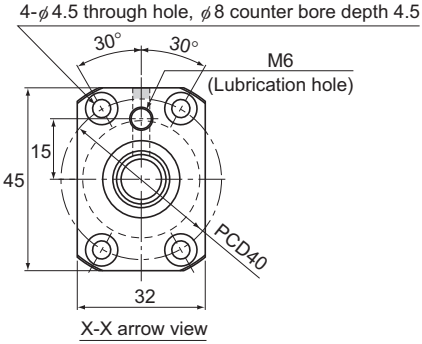

Ball Screw Specifications	
Lead (mm)	8
BCD (mm)	12.65
Thread minor diameter (mm)	9.7
Threading direction, No. of threaded grooves	Rightward, 1
No. of circuits	2.6 turns × 1 row
Clearance symbol	G2
Axial clearance (mm)	0.02 or less
Basic dynamic load rating Ca (kN)	4.7
Basic static load rating C0a (kN)	7.5
Preload torque (N·m)	—
Spacer ball	None
Rigidity value (N/μm)	127
Circulation method	Return pipe

Unit: mm

	Runout of the screw shaft axis D	Runout of the nut circumference H	Flange mounting surface runout I	Runout of the thread groove surface J	Lead angle accuracy	Nut mass kg	Shaft mass kg/m	Permissible rotational speed min^{-1}
	0.04	0.02	0.014	0.014	Travel distance: ±0.05/300	0.269	0.64	3500
	0.055	0.02	0.014	0.014	Travel distance: ±0.05/300	0.269	0.64	3500
	0.055	0.02	0.014	0.014	Travel distance: ±0.05/300	0.269	0.64	3500
	0.065	0.02	0.014	0.014	Travel distance: ±0.05/300	0.269	0.64	3500
	0.065	0.02	0.014	0.014	Travel distance: ±0.05/300	0.269	0.64	3500

Options⇒A15-333

BNK1402-3 Shaft diameter: 14; lead: 2

DN value	70000

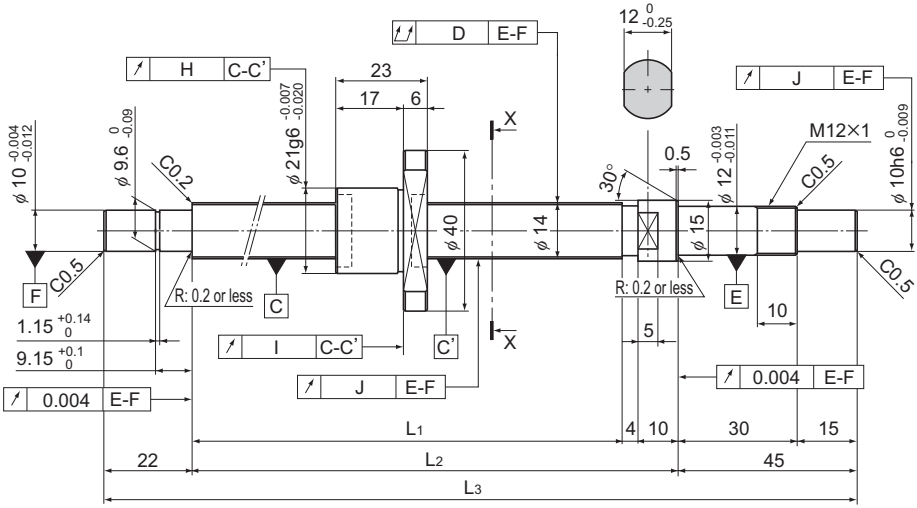

Model No.	Stroke	Screw shaft length		
		L_1	L_2	L_3
BNK 1402-3RRG0+166LC3Y	50	85	99	166
BNK 1402-3RRG0+166LC5Y				
BNK 1402-3RRG2+166LC7Y				
BNK 1402-3RRG0+216LC3Y	100	135	149	216
BNK 1402-3RRG0+216LC5Y				
BNK 1402-3RRG2+216LC7Y				
BNK 1402-3RRG0+266LC3Y	150	185	199	266
BNK 1402-3RRG0+266LC5Y				
BNK 1402-3RRG2+266LC7Y				
BNK 1402-3RRG0+316LC3Y	200	235	249	316
BNK 1402-3RRG0+316LC5Y				
BNK 1402-3RRG2+316LC7Y				
BNK 1402-3RRG0+416LC3Y	300	335	349	416
BNK 1402-3RRG0+416LC5Y				
BNK 1402-3RRG2+416LC7Y				

Note) A stainless steel type is also available for model BNK1402. When placing an order, add symbol “M” to the end of the model number.

(Example) BNK1402-3RRG0+166LC3Y M

Symbol for stainless steel type

For accuracy grades C3 and C5, clearance GT is also available as standard.

Download data by searching for the corresponding model number on the Technical Support site. https://tech.thk.com

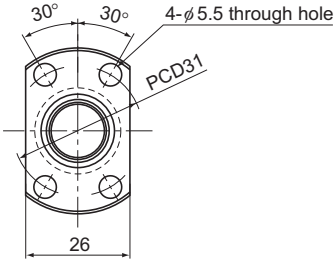

X-X arrow view

Ball Screw Specifications			
Lead (mm)	2		
BCD (mm)	14.3		
Thread minor diameter (mm)	13		
Threading direction, No. of threaded grooves	Rightward, 1		
No. of circuits	1 turn × 3 rows		
Clearance symbol	G0	GT	G2
Axial clearance (mm)	0	0.005 or less	0.02 or less
Basic dynamic load rating Ca (kN)	1.8	1.8	1.8
Basic static load rating C_0a (kN)	4.3	4.3	4.3
Preload torque (N·m)	4.9×10^{-3} to 4.9×10^{-2}	—	—
Spacer ball	None	None	None
Rigidity value (N/μm)	140		
Circulation method	Deflector		

Unit: mm

	Runout of the screw shaft axis	Runout of the nut circumference	Flange mounting surface runout	Runout of the thread groove surface	Lead angle accuracy		Nut mass	Shaft mass	Permissible rotational speed
					Representative travel distance error	Fluctuation			
	D	H	I	J			kg	kg/m	min^{-1}
	0.02	0.01	0.008	0.009	±0.008	0.008	0.15	1.0	3500
	0.025	0.012	0.01	0.012	±0.018	0.018	0.15	1.0	3500
	0.04	0.02	0.014	0.014	Travel distance: ±0.05/300		0.15	1.0	3500
	0.025	0.01	0.008	0.009	±0.01	0.008	0.15	1.0	3500
	0.03	0.012	0.01	0.012	±0.02	0.018	0.15	1.0	3500
	0.045	0.02	0.014	0.014	Travel distance: ±0.05/300		0.15	1.0	3500
	0.025	0.01	0.008	0.009	±0.01	0.008	0.15	1.0	3500
	0.03	0.012	0.01	0.012	±0.02	0.018	0.15	1.0	3500
	0.045	0.02	0.014	0.014	Travel distance: ±0.05/300		0.15	1.0	3500
	0.03	0.01	0.008	0.009	±0.012	0.008	0.15	1.0	3500
	0.04	0.012	0.01	0.012	±0.023	0.018	0.15	1.0	3500
	0.055	0.02	0.014	0.014	Travel distance: ±0.05/300		0.15	1.0	3500
	0.04	0.01	0.008	0.009	±0.013	0.01	0.15	1.0	3500
	0.05	0.012	0.01	0.012	±0.025	0.02	0.15	1.0	3500
	0.06	0.02	0.014	0.014	Travel distance: ±0.05/300		0.15	1.0	3500

Options⇒A15-333

BNK1404-3 Shaft diameter: 14; lead: 4

DN value	70000

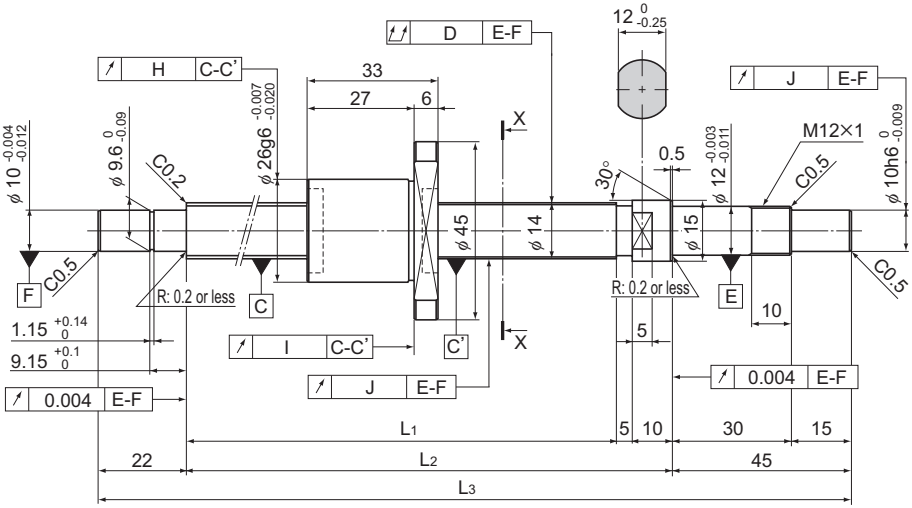

Model No.	Stroke	Screw shaft length		
		L_1	L_2	L_3
BNK 1404-3RRG0+230LC3Y	100	148	163	230
BNK 1404-3RRG0+230LC5Y				
BNK 1404-3RRG2+230LC7Y				
BNK 1404-3RRG0+280LC3Y	150	198	213	280
BNK 1404-3RRG0+280LC5Y				
BNK 1404-3RRG2+280LC7Y				
BNK 1404-3RRG0+330LC3Y	200	248	263	330
BNK 1404-3RRG0+330LC5Y				
BNK 1404-3RRG2+330LC7Y				
BNK 1404-3RRG0+430LC3Y	300	348	363	430
BNK 1404-3RRG0+430LC5Y				
BNK 1404-3RRG2+430LC7Y				
BNK 1404-3RRG0+530LC3Y	400	448	463	530
BNK 1404-3RRG0+530LC5Y				
BNK 1404-3RRG2+530LC7Y				

Note) A stainless steel type is also available for model BNK1404. When placing an order, add symbol "M" to the end of the model number.

(Example) BNK1404-3RRG0+230LC3Y M

Symbol for stainless steel type

For accuracy grades C3 and C5, clearance GT is also available as standard.

Download data by searching for the corresponding model number on the Technical Support site. https://tech.thk.com

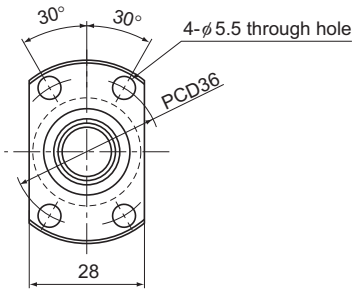

X-X arrow view

Ball Screw Specifications			
Lead (mm)	4		
BCD (mm)	14.65		
Thread minor diameter (mm)	12.2		
Threading direction, No. of threaded grooves	Rightward, 1		
No. of circuits	1 turn × 3 rows		
Clearance symbol	G0	GT	G2
Axial clearance (mm)	0	0.005 or less	0.02 or less
Basic dynamic load rating Ca (kN)	4.2	4.2	4.2
Basic static load rating C_0a (kN)	7.6	7.6	7.6
Preload torque (N·m)	9.8×10^{-3} to 6.9×10^{-2}	—	—
Spacer ball	None	None	None
Rigidity value (N/μm)	190		
Circulation method	Deflector		

Unit: mm

	Runout of the screw shaft axis	Runout of the nut circumference	Flange mounting surface runout	Runout of the thread groove surface	Lead angle accuracy		Nut mass	Shaft mass	Permissible rotational speed
					Representative travel distance error	Fluctuation			
	D	H	I	J			kg	kg/m	min^{-1}
	0.025	0.01	0.008	0.009	±0.01	0.008	0.13	0.8	3500
	0.03	0.012	0.01	0.012	±0.02	0.018	0.13	0.8	3500
	0.045	0.02	0.014	0.014	Travel distance: ±0.05/300		0.13	0.8	3500
	0.025	0.01	0.008	0.009	±0.01	0.008	0.13	0.8	3500
	0.03	0.012	0.01	0.012	±0.02	0.018	0.13	0.8	3500
	0.045	0.02	0.014	0.014	Travel distance: ±0.05/300		0.13	0.8	3500
	0.03	0.01	0.008	0.009	±0.012	0.008	0.13	0.8	3500
	0.04	0.012	0.01	0.012	±0.023	0.018	0.13	0.8	3500
	0.055	0.02	0.014	0.014	Travel distance: ±0.05/300		0.13	0.8	3500
	0.04	0.01	0.008	0.009	±0.013	0.01	0.13	0.8	3500
	0.05	0.012	0.01	0.012	±0.025	0.02	0.13	0.8	3500
	0.06	0.02	0.014	0.014	Travel distance: ±0.05/300		0.13	0.8	3500
	0.045	0.01	0.008	0.009	±0.015	0.01	0.13	0.8	3500
	0.055	0.012	0.01	0.012	±0.027	0.02	0.13	0.8	3500
	0.075	0.02	0.014	0.014	Travel distance: ±0.05/300		0.13	0.8	3500

Options⇒A15-333

BNK1408-2.5 Shaft diameter: 14; lead: 8

DN value	70000

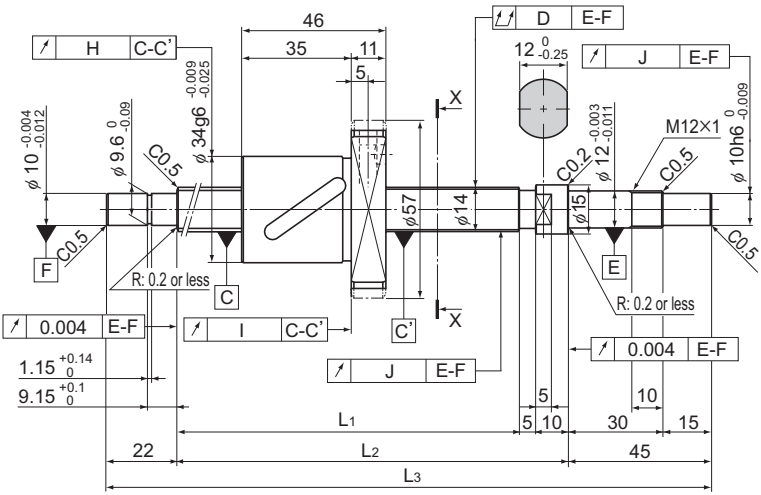

Model No.	Stroke	Screw shaft length		
		L_1	L_2	L_3
BNK 1408-2.5RRG0+321LC5Y	150	239	254	321
BNK 1408-2.5RRG2+321LC7Y				
BNK 1408-2.5RRG0+371LC5Y	200	289	304	371
BNK 1408-2.5RRG2+371LC7Y				
BNK 1408-2.5RRG0+421LC5Y	250	339	354	421
BNK 1408-2.5RRG2+421LC7Y				
BNK 1408-2.5RRG0+471LC5Y	300	389	404	471
BNK 1408-2.5RRG2+471LC7Y				
BNK 1408-2.5RRG0+521LC5Y	350	439	454	521
BNK 1408-2.5RRG2+521LC7Y				
BNK 1408-2.5RRG0+571LC5Y	400	489	504	571
BNK 1408-2.5RRG2+571LC7Y				
BNK 1408-2.5RRG0+621LC5Y	450	539	554	621
BNK 1408-2.5RRG2+621LC7Y				
BNK 1408-2.5RRG0+671LC5Y	500	589	604	671
BNK 1408-2.5RRG2+671LC7Y				
BNK 1408-2.5RRG0+721LC5Y	550	639	654	721
BNK 1408-2.5RRG2+721LC7Y				
BNK 1408-2.5RRG0+771LC5Y	600	689	704	771
BNK 1408-2.5RRG2+771LC7Y				
BNK 1408-2.5RRG0+871LC5Y	700	789	804	871
BNK 1408-2.5RRG2+871LC7Y				

Note) For accuracy grade C5, clearance GT is also standardized.
Plug the unused lubrication hole before using the product.

Download data by searching for the corresponding model number on the Technical Support site. https://tech.thk.com

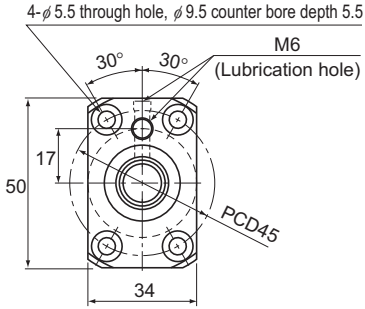

X-X arrow view

Ball Screw Specifications			
Lead (mm)	8		
BCD (mm)	14.75		
Thread minor diameter (mm)	11.2		
Threading direction, No. of threaded grooves	Rightward, 1		
No. of circuits	2.5 turns × 1 row		
Clearance symbol	G0	GT	G2
Axial clearance (mm)	0	0.005 or less	0.02 or less
Basic dynamic load rating Ca (kN)	4.3	6.9	6.9
Basic static load rating C_0a (kN)	5.8	11.5	11.5
Preload torque (N·m)	2×10^{-2} to 7.8×10^{-2}	—	—
Spacer ball	1 : 1	None	None
Rigidity value (N/μm)	80	150	
Circulation method	Return pipe		

Unit: mm

	Runout of the screw shaft axis	Runout of the nut circumference	Flange mounting surface runout	Runout of the thread groove surface	Lead angle accuracy		Nut mass	Shaft mass	Permissible rotational speed
					Representative travel distance error	Fluctuation			
	D	H	I	J			kg	kg/m	min^{-1}
	0.035	0.015	0.011	0.012	±0.023	0.018	0.29	0.84	4740
	0.055	0.03	0.018	0.014	Travel distance: ±0.05/300		0.29	0.84	4740
	0.035	0.015	0.011	0.012	±0.023	0.018	0.29	0.84	4740
	0.055	0.03	0.018	0.014	Travel distance: ±0.05/300		0.29	0.84	4740
	0.04	0.015	0.011	0.012	±0.025	0.02	0.29	0.84	4740
	0.06	0.03	0.018	0.014	Travel distance: ±0.05/300		0.29	0.84	4740
	0.04	0.015	0.011	0.012	±0.025	0.02	0.29	0.84	4740
	0.06	0.03	0.018	0.014	Travel distance: ±0.05/300		0.29	0.84	4740
	0.05	0.015	0.011	0.012	±0.027	0.02	0.29	0.84	4740
	0.075	0.03	0.018	0.014	Travel distance: ±0.05/300		0.29	0.84	4740
	0.05	0.015	0.011	0.012	±0.027	0.02	0.29	0.84	4740
	0.075	0.03	0.018	0.014	Travel distance: ±0.05/300		0.29	0.84	4740
	0.05	0.015	0.011	0.012	±0.03	0.023	0.29	0.84	4740
	0.075	0.03	0.018	0.014	Travel distance: ±0.05/300		0.29	0.84	4740
	0.065	0.015	0.011	0.012	±0.03	0.023	0.29	0.84	4740
	0.09	0.03	0.018	0.014	Travel distance: ±0.05/300		0.29	0.84	4740
	0.065	0.015	0.011	0.012	±0.035	0.025	0.29	0.84	4740
	0.09	0.03	0.018	0.014	Travel distance: ±0.05/300		0.29	0.84	4740
	0.065	0.015	0.011	0.012	±0.035	0.025	0.29	0.84	4740
	0.09	0.03	0.018	0.014	Travel distance: ±0.05/300		0.29	0.84	4740
	0.085	0.015	0.011	0.012	±0.035	0.025	0.29	0.84	4740
	0.12	0.03	0.018	0.014	Travel distance: ±0.05/300		0.29	0.84	4740

Options⇒A15-333

BNK1510-5.6 Shaft diameter: 15; lead: 10

DN value	70000

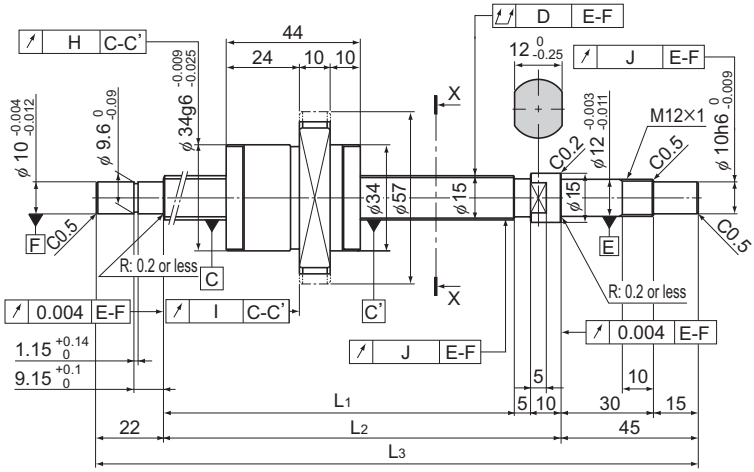

Model No.	Stroke	Screw shaft length		
		L_1	L_2	L_3
BNK 1510-5.6G0+321LC5Y	150	239	254	321
BNK 1510-5.6G2+321LC7Y				
BNK 1510-5.6G0+371LC5Y	200	289	304	371
BNK 1510-5.6G2+371LC7Y				
BNK 1510-5.6G0+421LC5Y	250	339	354	421
BNK 1510-5.6G2+421LC7Y				
BNK 1510-5.6G0+471LC5Y	300	389	404	471
BNK 1510-5.6G2+471LC7Y				
BNK 1510-5.6G0+521LC5Y	350	439	454	521
BNK 1510-5.6G2+521LC7Y				
BNK 1510-5.6G0+571LC5Y	400	489	504	571
BNK 1510-5.6G2+571LC7Y				
BNK 1510-5.6G0+621LC5Y	450	539	554	621
BNK 1510-5.6G2+621LC7Y				
BNK 1510-5.6G0+671LC5Y	500	589	604	671
BNK 1510-5.6G2+671LC7Y				
BNK 1510-5.6G0+721LC5Y	550	639	654	721
BNK 1510-5.6G2+721LC7Y				
BNK 1510-5.6G0+771LC5Y	600	689	704	771
BNK 1510-5.6G2+771LC7Y				
BNK 1510-5.6G0+871LC5Y	700	789	804	871
BNK 1510-5.6G2+871LC7Y				
BNK 1510-5.6G0+971LC5Y	800	889	904	971
BNK 1510-5.6G2+971LC7Y				

Note) For accuracy grade C5, clearance GT is also standardized.

Download data by searching for the corresponding model number on the Technical Support site. https://tech.thk.com

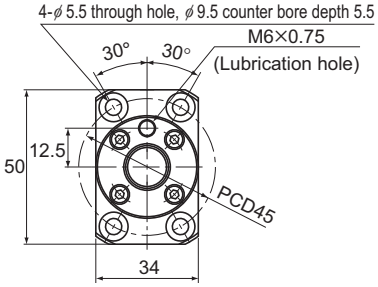

X-X arrow view

Ball Screw Specifications			
Lead (mm)	10		
BCD (mm)	15.75		
Thread minor diameter (mm)	12.5		
Threading direction, No. of threaded grooves	Rightward, 2		
No. of circuits	2.8 turns × 2 rows		
Clearance symbol	G0	GT	G2
Axial clearance (mm)	0	0.005 or less	0.02 or less
Basic dynamic load rating Ca (kN)	9	14.3	14.3
Basic static load rating C_0a (kN)	13.9	27.9	27.9
Preload torque (N·m)	2×10^{-2} to 9.8×10^{-2}	—	—
Spacer ball	1 : 1	None	None
Rigidity value (N/μm)	190	350	
Circulation method	End cap		

Unit: mm

Runout of the screw shaft axis D	Runout of the nut circumference H	Flange mounting surface runout I	Runout of the thread groove surface J	Lead angle accuracy: Representative travel distance error	Lead angle accuracy: Fluctuation	Nut mass kg	Shaft mass kg/m	Permissible rotational speed min^{-1}
0.035	0.015	0.011	0.012	±0.023	0.018	0.22	0.76	4440
0.055	0.03	0.018	0.014	Travel distance: ±0.05/300		0.22	0.76	4440
0.035	0.015	0.011	0.012	±0.023	0.018	0.22	0.76	4440
0.055	0.03	0.018	0.014	Travel distance: ±0.05/300		0.22	0.76	4440
0.04	0.015	0.011	0.012	±0.025	0.02	0.22	0.76	4440
0.06	0.03	0.018	0.014	Travel distance: ±0.05/300		0.22	0.76	4440
0.04	0.015	0.011	0.012	±0.025	0.02	0.22	0.76	4440
0.06	0.03	0.018	0.014	Travel distance: ±0.05/300		0.22	0.76	4440
0.05	0.015	0.011	0.012	±0.027	0.02	0.22	0.76	4440
0.075	0.03	0.018	0.014	Travel distance: ±0.05/300		0.22	0.76	4440
0.05	0.015	0.011	0.012	±0.027	0.02	0.22	0.76	4440
0.075	0.03	0.018	0.014	Travel distance: ±0.05/300		0.22	0.76	4440
0.05	0.015	0.011	0.012	±0.03	0.023	0.22	0.76	4440
0.075	0.03	0.018	0.014	Travel distance: ±0.05/300		0.22	0.76	4440
0.065	0.015	0.011	0.012	±0.03	0.023	0.22	0.76	4440
0.09	0.03	0.018	0.014	Travel distance: ±0.05/300		0.22	0.76	4440
0.065	0.015	0.011	0.012	±0.035	0.025	0.22	0.76	4440
0.09	0.03	0.018	0.014	Travel distance: ±0.05/300		0.22	0.76	4440
0.065	0.015	0.011	0.012	±0.035	0.025	0.22	0.76	4440
0.09	0.03	0.018	0.014	Travel distance: ±0.05/300		0.22	0.76	4440
0.085	0.015	0.011	0.012	±0.035	0.025	0.22	0.76	4440
0.12	0.03	0.018	0.014	Travel distance: ±0.05/300		0.22	0.76	4440
0.085	0.015	0.011	0.012	±0.04	0.027	0.22	0.76	4440
0.12	0.03	0.018	0.014	Travel distance: ±0.05/300		0.22	0.76	4440

Options⇒A15-333

BNK1520-3 Shaft diameter: 15; lead: 20

DN value	70000

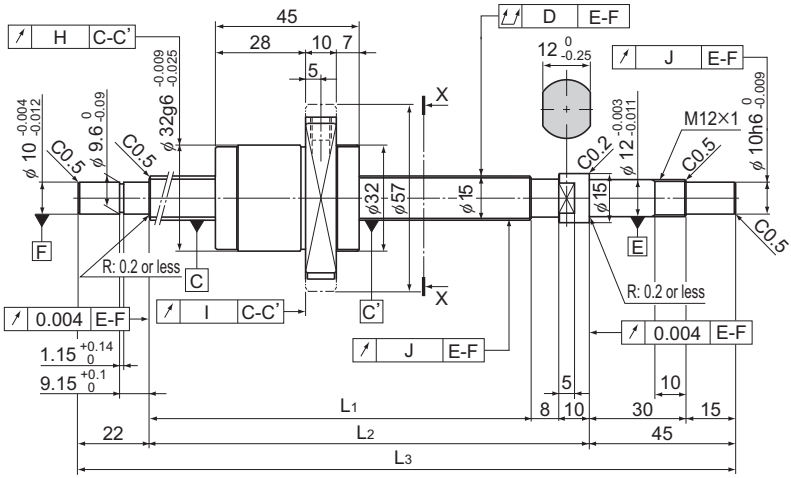

Model No.	Stroke	Screw shaft length		
		L_1	L_2	L_3
BNK 1520-3G0+321LC5Y	150	236	254	321
BNK 1520-3G2+321LC7Y				
BNK 1520-3G0+371LC5Y	200	286	304	371
BNK 1520-3G2+371LC7Y				
BNK 1520-3G0+421LC5Y	250	336	354	421
BNK 1520-3G2+421LC7Y				
BNK 1520-3G0+471LC5Y	300	386	404	471
BNK 1520-3G2+471LC7Y				
BNK 1520-3G0+521LC5Y	350	436	454	521
BNK 1520-3G2+521LC7Y				
BNK 1520-3G0+571LC5Y	400	486	504	571
BNK 1520-3G2+571LC7Y				
BNK 1520-3G0+621LC5Y	450	536	554	621
BNK 1520-3G2+621LC7Y				
BNK 1520-3G0+671LC5Y	500	586	604	671
BNK 1520-3G2+671LC7Y				
BNK 1520-3G0+721LC5Y	550	636	654	721
BNK 1520-3G2+721LC7Y				
BNK 1520-3G0+771LC5Y	600	686	704	771
BNK 1520-3G2+771LC7Y				
BNK 1520-3G0+871LC5Y	700	786	804	871
BNK 1520-3G2+871LC7Y				
BNK 1520-3G0+971LC5Y	800	886	904	971
BNK 1520-3G2+971LC7Y				

Note) For accuracy grade C5, clearance GT is also standardized.

Download data by searching for the corresponding model number on the Technical Support site. https://tech.thk.com

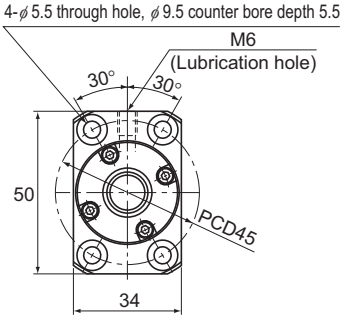

X-X arrow view

Ball Screw Specifications			
Lead (mm)	20		
BCD (mm)	15.75		
Thread minor diameter (mm)	12.5		
Threading direction, No. of threaded grooves	Rightward, 2		
No. of circuits	1.5 turns × 2 rows		
Clearance symbol	G0	GT	G2
Axial clearance (mm)	0	0.005 or less	0.02 or less
Basic dynamic load rating Ca (kN)	5.1	8	8
Basic static load rating C_0a (kN)	7.9	15.8	15.8
Preload torque (N·m)	2×10^{-2} to 8.8×10^{-2}	—	—
Spacer ball	1 : 1	None	None
Rigidity value (N/μm)	110	200	
Circulation method	End cap		

Unit: mm

	Runout of the screw shaft axis	Runout of the nut circumference	Flange mounting surface runout	Runout of the thread groove surface	Lead angle accuracy		Nut mass	Shaft mass	Permissible rotational speed
					Representative travel distance error	Fluctuation			
	D	H	I	J			kg	kg/m	min^{-1}
	0.035	0.015	0.011	0.012	±0.023	0.018	0.32	1.05	4440
	0.055	0.03	0.018	0.014	Travel distance: ±0.05/300		0.32	1.05	4440
	0.035	0.015	0.011	0.012	±0.023	0.018	0.32	1.05	4440
	0.055	0.03	0.018	0.014	Travel distance: ±0.05/300		0.32	1.05	4440
	0.04	0.015	0.011	0.012	±0.025	0.02	0.32	1.05	4440
	0.06	0.03	0.018	0.014	Travel distance: ±0.05/300		0.32	1.05	4440
	0.04	0.015	0.011	0.012	±0.025	0.02	0.32	1.05	4440
	0.06	0.03	0.018	0.014	Travel distance: ±0.05/300		0.32	1.05	4440
	0.05	0.015	0.011	0.012	±0.027	0.02	0.32	1.05	4440
	0.075	0.03	0.018	0.014	Travel distance: ±0.05/300		0.32	1.05	4440
	0.05	0.015	0.011	0.012	±0.027	0.02	0.32	1.05	4440
	0.075	0.03	0.018	0.014	Travel distance: ±0.05/300		0.32	1.05	4440
	0.05	0.015	0.011	0.012	±0.03	0.023	0.32	1.05	4440
	0.075	0.03	0.018	0.014	Travel distance: ±0.05/300		0.32	1.05	4440
	0.065	0.015	0.011	0.012	±0.03	0.023	0.32	1.05	4440
	0.09	0.03	0.018	0.014	Travel distance: ±0.05/300		0.32	1.05	4440
	0.065	0.015	0.011	0.012	±0.035	0.025	0.32	1.05	4440
	0.09	0.03	0.018	0.014	Travel distance: ±0.05/300		0.32	1.05	4440
	0.065	0.015	0.011	0.012	±0.035	0.025	0.32	1.05	4440
	0.09	0.03	0.018	0.014	Travel distance: ±0.05/300		0.32	1.05	4440
	0.085	0.015	0.011	0.012	±0.035	0.025	0.32	1.05	4440
	0.12	0.03	0.018	0.014	Travel distance: ±0.05/300		0.32	1.05	4440
	0.085	0.015	0.011	0.012	±0.04	0.027	0.32	1.05	4440
	0.12	0.03	0.018	0.014	Travel distance: ±0.05/300		0.32	1.05	4440

Options⇒A15-333

BNK1616-3.6 Shaft diameter: 16; lead: 16

DN value	70000

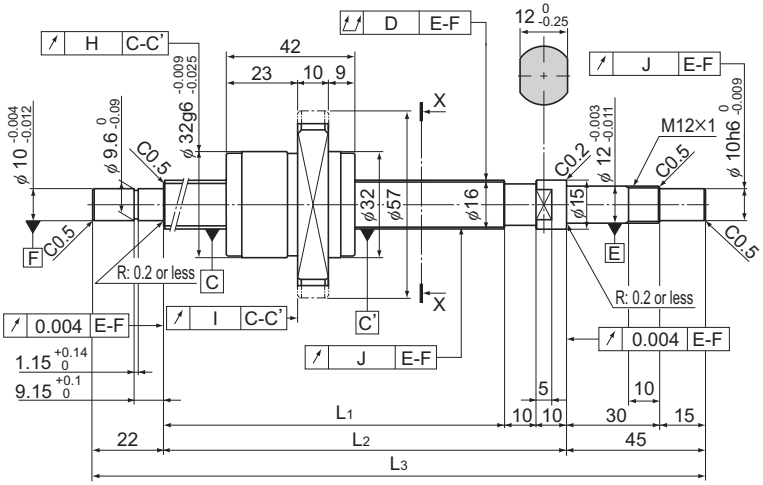

Model No.	Stroke	Screw shaft length		
		L_1	L_2	L_3
BNK 1616-3.6G0+321LC5Y	150	234	254	321
BNK 1616-3.6G2+321LC7Y				
BNK 1616-3.6G0+371LC5Y	200	284	304	371
BNK 1616-3.6G2+371LC7Y				
BNK 1616-3.6G0+421LC5Y	250	334	354	421
BNK 1616-3.6G2+421LC7Y				
BNK 1616-3.6G0+471LC5Y	300	384	404	471
BNK 1616-3.6G2+471LC7Y				
BNK 1616-3.6G0+521LC5Y	350	434	454	521
BNK 1616-3.6G2+521LC7Y				
BNK 1616-3.6G0+571LC5Y	400	484	504	571
BNK 1616-3.6G2+571LC7Y				
BNK 1616-3.6G0+621LC5Y	450	534	554	621
BNK 1616-3.6G2+621LC7Y				
BNK 1616-3.6G0+671LC5Y	500	584	604	671
BNK 1616-3.6G2+671LC7Y				
BNK 1616-3.6G0+721LC5Y	550	634	654	721
BNK 1616-3.6G2+721LC7Y				
BNK 1616-3.6G0+771LC5Y	600	684	704	771
BNK 1616-3.6G2+771LC7Y				
BNK 1616-3.6G0+871LC5Y	700	784	804	871
BNK 1616-3.6G2+871LC7Y				
BNK 1616-3.6G0+971LC5Y	800	884	904	971
BNK 1616-3.6G2+971LC7Y				

Note) For accuracy grade C5, clearance GT is also standardized.

Download data by searching for the corresponding model number on the Technical Support site. https://tech.thk.com

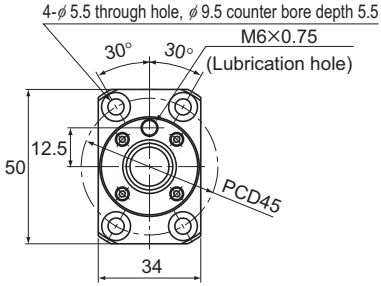

X-X arrow view

Ball Screw Specifications			
Lead (mm)	16		
BCD (mm)	16.65		
Thread minor diameter (mm)	13.7		
Threading direction, No. of threaded grooves	Rightward, 2		
No. of circuits	1.8 turns × 2 rows		
Clearance symbol	G0	GT	G2
Axial clearance (mm)	0	0.005 or less	0.02 or less
Basic dynamic load rating Ca (kN)	4.4	7.1	7.1
Basic static load rating C_0a (kN)	7.2	14.3	14.3
Preload torque (N·m)	2×10^{-2} to 9.8×10^{-2}	—	—
Spacer ball	1 : 1	None	None
Rigidity value (N/μm)	120	230	
Circulation method	End cap		

Unit: mm

	Runout of the screw shaft axis	Runout of the nut circumference	Flange mounting surface runout	Runout of the thread groove surface	Lead angle accuracy		Nut mass	Shaft mass	Permissible rotational speed
					Representative travel distance error	Fluctuation			
	D	H	I	J			kg	kg/m	min^{-1}
	0.035	0.015	0.011	0.012	±0.023	0.018	0.2	1.25	4200
	0.055	0.03	0.018	0.014	Travel distance: ±0.05/300		0.2	1.25	4200
	0.035	0.015	0.011	0.012	±0.023	0.018	0.2	1.25	4200
	0.055	0.03	0.018	0.014	Travel distance: ±0.05/300		0.2	1.25	4200
	0.04	0.015	0.011	0.012	±0.025	0.02	0.2	1.25	4200
	0.06	0.03	0.018	0.014	Travel distance: ±0.05/300		0.2	1.25	4200
	0.04	0.015	0.011	0.012	±0.025	0.02	0.2	1.25	4200
	0.06	0.03	0.018	0.014	Travel distance: ±0.05/300		0.2	1.25	4200
	0.05	0.015	0.011	0.012	±0.027	0.02	0.2	1.25	4200
	0.075	0.03	0.018	0.014	Travel distance: ±0.05/300		0.2	1.25	4200
	0.05	0.015	0.011	0.012	±0.027	0.02	0.2	1.25	4200
	0.075	0.03	0.018	0.014	Travel distance: ±0.05/300		0.2	1.25	4200
	0.05	0.015	0.011	0.012	±0.03	0.023	0.2	1.25	4200
	0.075	0.03	0.018	0.014	Travel distance: ±0.05/300		0.2	1.25	4200
	0.065	0.015	0.011	0.012	±0.03	0.023	0.2	1.25	4200
	0.09	0.03	0.018	0.014	Travel distance: ±0.05/300		0.2	1.25	4200
	0.065	0.015	0.011	0.012	±0.035	0.025	0.2	1.25	4200
	0.09	0.03	0.018	0.014	Travel distance: ±0.05/300		0.2	1.25	4200
	0.065	0.015	0.011	0.012	±0.035	0.025	0.2	1.25	4200
	0.09	0.03	0.018	0.014	Travel distance: ±0.05/300		0.2	1.25	4200
	0.085	0.015	0.011	0.012	±0.035	0.025	0.2	1.25	4200
	0.12	0.03	0.018	0.014	Travel distance: ±0.05/300		0.2	1.25	4200
	0.085	0.015	0.011	0.012	±0.04	0.027	0.2	1.25	4200
	0.12	0.03	0.018	0.014	Travel distance: ±0.05/300		0.2	1.25	4200

Options⇒A15-333

BNK2010-2.5 Shaft diameter: 20; lead: 10

DN value	70000

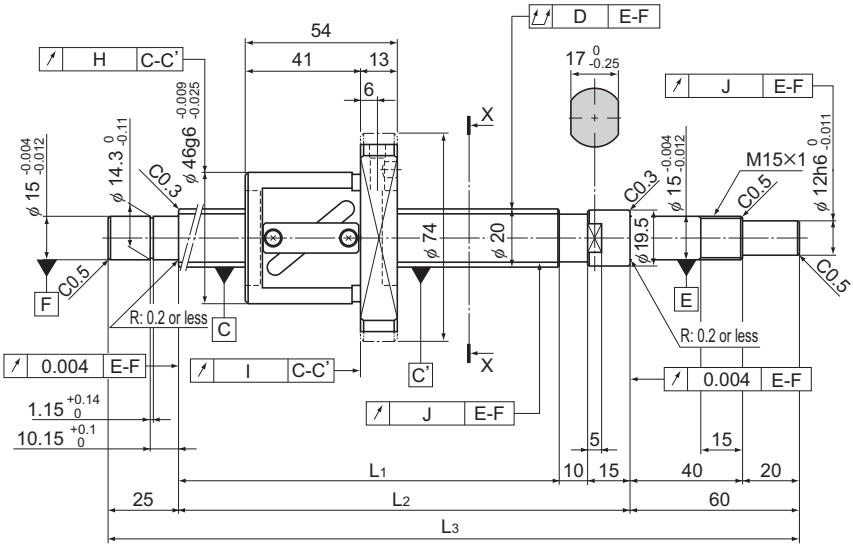

Model No.	Stroke	Screw shaft length		
		L_1	L_2	L_3
BNK 2010-2.5RRG0+499LC5Y	300	389	414	499
BNK 2010-2.5RRG2+499LC7Y				
BNK 2010-2.5RRG0+599LC5Y	400	489	514	599
BNK 2010-2.5RRG2+599LC7Y				
BNK 2010-2.5RRG0+699LC5Y	500	589	614	699
BNK 2010-2.5RRG2+699LC7Y				
BNK 2010-2.5RRG0+799LC5Y	600	689	714	799
BNK 2010-2.5RRG2+799LC7Y				
BNK 2010-2.5RRG0+899LC5Y	700	789	814	899
BNK 2010-2.5RRG2+899LC7Y				
BNK 2010-2.5RRG0+999LC5Y	800	889	914	999
BNK 2010-2.5RRG2+999LC7Y				
BNK 2010-2.5RRG0+1099LC5Y	900	989	1014	1099
BNK 2010-2.5RRG2+1099LC7Y				
BNK 2010-2.5RRG0+1199LC5Y	1000	1089	1114	1199
BNK 2010-2.5RRG2+1199LC7Y				
BNK 2010-2.5RRG0+1299LC5Y	1100	1189	1214	1299
BNK 2010-2.5RRG2+1299LC7Y				

Note) For accuracy grade C5, clearance GT is also standardized.
Plug the unused lubrication hole before using the product.

Download data by searching for the corresponding model number on the Technical Support site. https://tech.thk.com

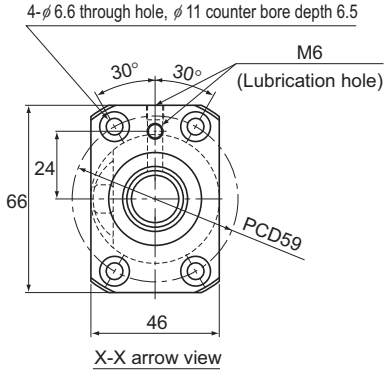

Ball Screw Specifications			
Lead (mm)	10		
BCD (mm)	21		
Thread minor diameter (mm)	16.4		
Threading direction, No. of threaded grooves	Rightward, 1		
No. of circuits	2.5 turns × 1 row		
Clearance symbol	G0	GT	G2
Axial clearance (mm)	0	0.005 or less	0.02 or less
Basic dynamic load rating Ca (kN)	7	11.1	11.1
Basic static load rating C_0a (kN)	11	22	22
Preload torque (N·m)	2×10^{-2} to 9.8×10^{-2}	—	—
Spacer ball	1 : 1	None	None
Rigidity value (N/μm)	110	210	
Circulation method	Return pipe		

Unit: mm

	Runout of the screw shaft axis	Runout of the nut circumference	Flange mounting surface runout	Runout of the thread groove surface	Lead angle accuracy		Nut mass	Shaft mass	Permissible rotational speed
					Representative travel distance error	Fluctuation			
	D	H	I	J			kg	kg/m	min^{-1}
	0.04	0.015	0.011	0.012	±0.025	0.02	0.58	1.81	3330
	0.06	0.03	0.018	0.014	Travel distance: ±0.05/300		0.58	1.81	3330
	0.05	0.015	0.011	0.012	±0.027	0.02	0.58	1.81	3330
	0.075	0.03	0.018	0.014	Travel distance: ±0.05/300		0.58	1.81	3330
	0.065	0.015	0.011	0.012	±0.03	0.023	0.58	1.81	3330
	0.09	0.03	0.018	0.014	Travel distance: ±0.05/300		0.58	1.81	3330
	0.065	0.015	0.011	0.012	±0.035	0.025	0.58	1.81	3330
	0.09	0.03	0.018	0.014	Travel distance: ±0.05/300		0.58	1.81	3330
	0.085	0.015	0.011	0.012	±0.035	0.025	0.58	1.81	3330
	0.12	0.03	0.018	0.014	Travel distance: ±0.05/300		0.58	1.81	3330
	0.085	0.015	0.011	0.012	±0.04	0.027	0.58	1.81	3330
	0.12	0.03	0.018	0.014	Travel distance: ±0.05/300		0.58	1.81	3330
	0.11	0.015	0.011	0.012	±0.04	0.027	0.58	1.81	3330
	0.15	0.03	0.018	0.014	Travel distance: ±0.05/300		0.58	1.81	3330
	0.11	0.015	0.011	0.012	±0.046	0.03	0.58	1.81	3330
	0.15	0.03	0.018	0.014	Travel distance: ±0.05/300		0.58	1.81	3330
	0.15	0.015	0.011	0.012	±0.046	0.03	0.58	1.81	3330
	0.19	0.03	0.018	0.014	Travel distance: ±0.05/300		0.58	1.81	3330

Options⇒A15-333

BNK2020-3.6 Shaft diameter: 20; lead: 20

DN value	70000

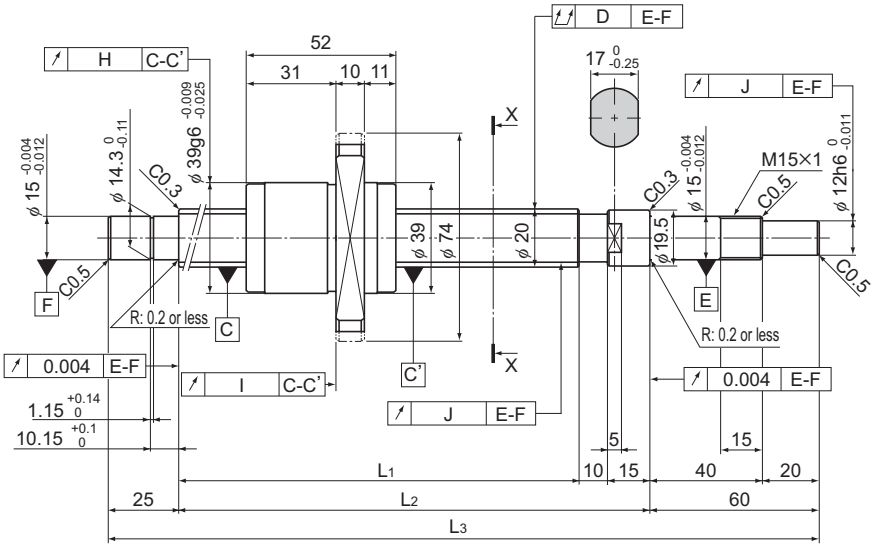

Model No.	Stroke	Screw shaft length		
		L_1	L_2	L_3
BNK 2020-3.6G0+520LC5Y	300	410	435	520
BNK 2020-3.6G2+520LC7Y				
BNK 2020-3.6G0+620LC5Y	400	510	535	620
BNK 2020-3.6G2+620LC7Y				
BNK 2020-3.6G0+720LC5Y	500	610	635	720
BNK 2020-3.6G2+720LC7Y				
BNK 2020-3.6G0+820LC5Y	600	710	735	820
BNK 2020-3.6G2+820LC7Y				
BNK 2020-3.6G0+920LC5Y	700	810	835	920
BNK 2020-3.6G2+920LC7Y				
BNK 2020-3.6G0+1020LC5Y	800	910	935	1020
BNK 2020-3.6G2+1020LC7Y				
BNK 2020-3.6G0+1120LC5Y	900	1010	1035	1120
BNK 2020-3.6G2+1120LC7Y				
BNK 2020-3.6G0+1220LC5Y	1000	1110	1135	1220
BNK 2020-3.6G2+1220LC7Y				
BNK 2020-3.6G0+1320LC5Y	1100	1210	1235	1320
BNK 2020-3.6G2+1320LC7Y				

Note) For accuracy grade C5, clearance GT is also standardized.

Download data by searching for the corresponding model number on the Technical Support site. https://tech.thk.com

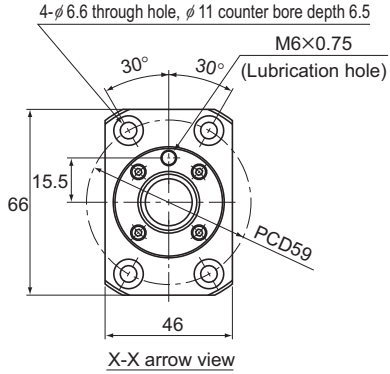

Ball Screw Specifications			
Lead (mm)	20		
BCD (mm)	20.75		
Thread minor diameter (mm)	17.5		
Threading direction, No. of threaded grooves	Rightward, 2		
No. of circuits	1.8 turns × 2 rows		
Clearance symbol	G0	GT	G2
Axial clearance (mm)	0	0.005 or less	0.02 or less
Basic dynamic load rating Ca (kN)	7	11.1	11.1
Basic static load rating C_0a (kN)	12.3	24.7	24.7
Preload torque (N·m)	2×10^{-2} to 9.8×10^{-2}	—	—
Spacer ball	1 : 1	None	None
Rigidity value (N/μm)	160	290	
Circulation method	End cap		

Unit: mm

	Runout of the screw shaft axis	Runout of the nut circumference	Flange mounting surface runout	Runout of the thread groove surface	Lead angle accuracy		Nut mass	Shaft mass	Permissible rotational speed
					Representative travel distance error	Fluctuation			
	D	H	I	J			kg	kg/m	min^{-1}
	0.05	0.015	0.011	0.012	±0.027	0.02	0.39	2.04	3370
	0.075	0.03	0.018	0.014	Travel distance: ±0.05/300		0.39	2.04	3370
	0.05	0.015	0.011	0.012	±0.03	0.023	0.39	2.04	3370
	0.075	0.03	0.018	0.014	Travel distance: ±0.05/300		0.39	2.04	3370
	0.065	0.015	0.011	0.012	±0.03	0.023	0.39	2.04	3370
	0.09	0.03	0.018	0.014	Travel distance: ±0.05/300		0.39	2.04	3370
	0.085	0.015	0.011	0.012	±0.035	0.025	0.39	2.04	3370
	0.12	0.03	0.018	0.014	Travel distance: ±0.05/300		0.39	2.04	3370
	0.085	0.015	0.011	0.012	±0.04	0.027	0.39	2.04	3370
	0.12	0.03	0.018	0.014	Travel distance: ±0.05/300		0.39	2.04	3370
	0.11	0.015	0.011	0.012	±0.04	0.027	0.39	2.04	3370
	0.15	0.03	0.018	0.014	Travel distance: ±0.05/300		0.39	2.04	3370
	0.11	0.015	0.011	0.012	±0.046	0.03	0.39	2.04	3370
	0.15	0.03	0.018	0.014	Travel distance: ±0.05/300		0.39	2.04	3370
	0.11	0.015	0.011	0.012	±0.046	0.03	0.39	2.04	3370
	0.15	0.03	0.018	0.014	Travel distance: ±0.05/300		0.39	2.04	3370
	0.15	0.015	0.011	0.012	±0.046	0.03	0.39	2.04	3370
	0.19	0.03	0.018	0.014	Travel distance: ±0.05/300		0.39	2.04	3370

Options⇒A15-333

BNK2520-3.6 Shaft diameter: 25; lead: 20

DN value	70000

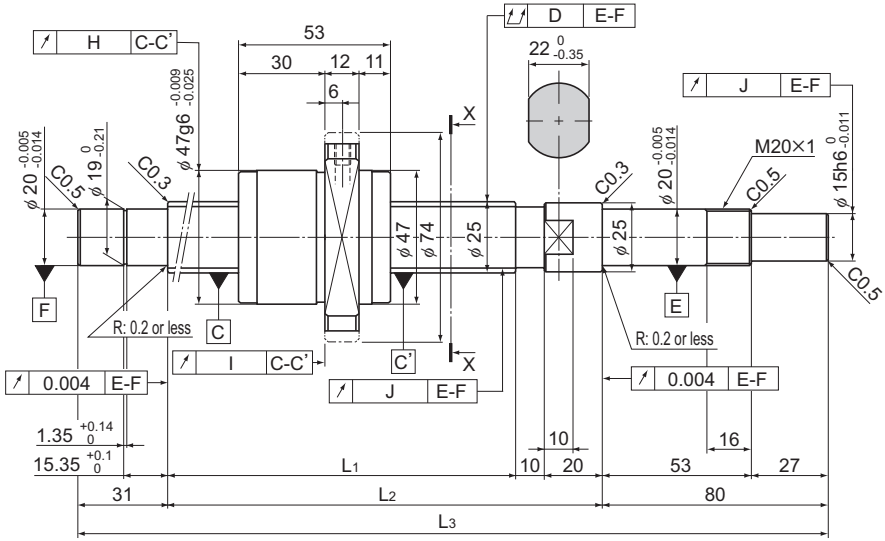

Model No.	Stroke	Screw shaft length		
		L_1	L_2	L_3
BNK 2520-3.6G0+751LC5Y	500	610	640	751
BNK 2520-3.6G2+751LC7Y				
BNK 2520-3.6G0+851LC5Y	600	710	740	851
BNK 2520-3.6G2+851LC7Y				
BNK 2520-3.6G0+1051LC5Y	800	910	940	1051
BNK 2520-3.6G2+1051LC7Y				
BNK 2520-3.6G0+1251LC5Y	1000	1110	1140	1251
BNK 2520-3.6G2+1251LC7Y				
BNK 2520-3.6G0+1451LC5Y	1200	1310	1340	1451
BNK 2520-3.6G2+1451LC7Y				
BNK 2520-3.6G0+1651LC5Y	1400	1510	1540	1651
BNK 2520-3.6G2+1651LC7Y				
BNK 2520-3.6G0+1851LC5Y	1600	1710	1740	1851
BNK 2520-3.6G2+1851LC7Y				

Note) For accuracy grade C5, clearance GT is also standardized.

Download data by searching for the corresponding model number on the Technical Support site. https://tech.thk.com

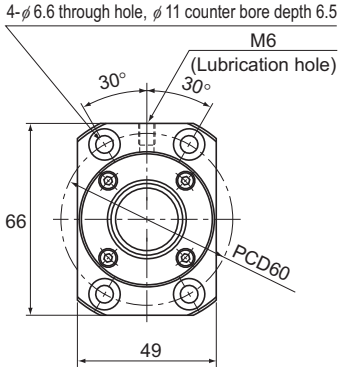

X-X arrow view

Ball Screw Specifications			
Lead (mm)	20		
BCD (mm)	26		
Thread minor diameter (mm)	21.9		
Threading direction, No. of threaded grooves	Rightward, 2		
No. of circuits	1.8 turns × 2 rows		
Clearance symbol	G0	GT	G2
Axial clearance (mm)	0	0.005 or less	0.02 or less
Basic dynamic load rating Ca (kN)	10.5	16.7	16.7
Basic static load rating C_0a (kN)	19	38	38
Preload torque (N·m)	4.9×10^{-2} to 2.2×10^{-1}	—	—
Spacer ball	1 : 1	None	None
Rigidity value (N/μm)	190	360	
Circulation method	End cap		

Unit: mm

	Runout of the screw shaft axis	Runout of the nut circumference	Flange mounting surface runout	Runout of the thread groove surface	Lead angle accuracy		Nut mass	Shaft mass	Permissible rotational speed
					Representative travel distance error	Fluctuation			
	D	H	I	J			kg	kg/m	min^{-1}
	0.055	0.015	0.011	0.013	±0.03	0.023	0.53	3.03	2690
	0.07	0.03	0.018	0.02	Travel distance: ±0.05/300		0.53	3.03	2690
	0.065	0.015	0.011	0.013	±0.035	0.025	0.53	3.03	2690
	0.085	0.03	0.018	0.02	Travel distance: ±0.05/300		0.53	3.03	2690
	0.085	0.015	0.011	0.013	±0.04	0.027	0.53	3.03	2690
	0.1	0.03	0.018	0.02	Travel distance: ±0.05/300		0.53	3.03	2690
	0.11	0.015	0.011	0.013	±0.046	0.03	0.53	3.03	2690
	0.13	0.03	0.018	0.02	Travel distance: ±0.05/300		0.53	3.03	2690
	0.11	0.015	0.011	0.013	±0.054	0.035	0.53	3.03	2690
	0.13	0.03	0.018	0.02	Travel distance: ±0.05/300		0.53	3.03	2690
	0.14	0.015	0.011	0.013	±0.054	0.035	0.53	3.03	2690
	0.17	0.03	0.018	0.02	Travel distance: ±0.05/300		0.53	3.03	2690
	0.14	0.015	0.011	0.013	±0.065	0.04	0.53	3.03	2690
	0.17	0.03	0.018	0.02	Travel distance: ±0.05/300		0.53	3.03	2690

Options⇒A15-333

MDK (Unfinished Shaft Ends) No Preload

DN value	70000

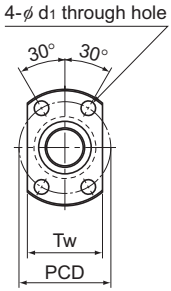

Model No.	Ball screw specifications							Nut			
	Screw shaft outer diameter	Lead	Ball center-to-center diameter	Thread minor diameter	No. of loaded circuits	Basic load rating		Outer diameter	Flange diameter	Overall length	
						Ca	C_0a				
	d	Ph	dp	dc	Rows × turns	kN	kN	D	D_1	L_1	H
MDK 0401-3	4	1	4.15	3.4	3×1	0.29	0.42	9	19	13	3
MDK 0601-3	6	1	6.2	5.3	3×1	0.54	0.94	11	23	14.5	3.5
MDK 0801-3	8	1	8.2	7.3	3×1	0.64	1.4	13	26	15	4
MDK 0802-3	8	2	8.3	7	3×1	1.4	2.3	15	28	22	5
MDK 1002-3	10	2	10.3	9	3×1	1.5	2.9	17	34	22	5

Model number coding

MDK0401-3 GT +95L C5 A

- MDK0401-3: Model No.
- GT: Symbol for clearance in the axial direction (*1)
- +95L: Overall screw shaft length (in mm)
- C5: Accuracy symbol (*2)
- A: Unfinished shaft ends code

(*1) See A15-19. (*2) See A15-12.

Download data by searching for the corresponding model number on the Technical Support site. https://tech.thk.com

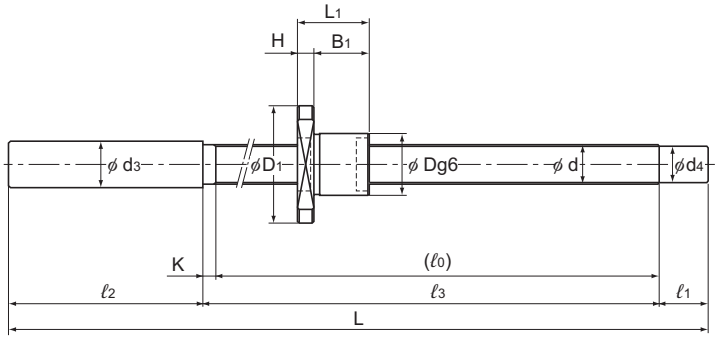

Unit: mm

Dimensions					Screw shaft dimensions									Nut mass	Shaft mass	Permissible rotational speed
	B_1	PCD	d_1	Tw	Unfinished Shaft End Code	Overall length L	ℓ_0	ℓ_1	ℓ_2	ℓ_3	d_3	d_4	K	kg	kg/m	min^{-1}
	10	14	2.9	13	A	95	47	10	35	50	6.2	3.2	3	0.01	0.07	3500
						115	67			70						
						145	97			100						
	11	17	3.4	15	A	120	67	10	40	70	8.2	5.3	3	0.02	0.14	3500
						150	97			100						
						180	127			130						
	11	20	3.4	17	A	130	67	15	45	70	10.2	7.3	3	0.02	0.29	3500
						160	97			100						
						190	127			130						
						240	177			180						
	17	22	3.4	19	A	140	76	15	45	80	10.2	7	4	0.04	0.27	3500
						170	106			110						
						200	136			140						
						250	186			190						
	17	26	4.5	21	A	160	86	15	55	90	12.2	9	4	0.05	0.47	3500
						210	136			140						
						260	186			190						
						310	236			240						

Note) Models MDK 0401, 0601, and 0801 are not provided with a labyrinth seal.

Options⇒A15-333

MDK (Unfinished Shaft Ends) No Preload

DN value	70000

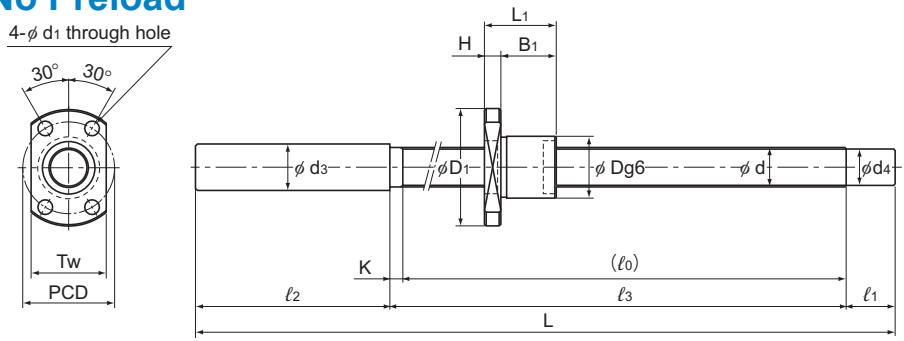

MDK1202/1402/1404

Model No.	Ball screw specifications							Nut			
	Screw shaft outer diameter	Lead	Ball center-to-center diameter	Thread minor diameter	No. of loaded circuits	Basic load rating		Outer diameter	Flange diameter	Overall length	
						Ca	C_0a				
	d	Ph	dp	dc	Rows X turns	kN	kN	D	D_1	L_1	H
MDK 1202-3	12	2	12.3	11	3×1	1.7	3.6	19	36	22	5
MDK 1402-3	14	2	14.3	13	3×1	1.8	4.3	21	40	23	6
MDK 1404-3	14	4	14.65	12.2	3×1	4.2	7.6	26	45	33	6
MDK 1405-3	14	5	14.75	11.2	3×1	7	11.6	26	45	42	10

Model number coding

MDK1202-3 RR GT +165L C5 A

- MDK1202-3: Model No.
- RR: Seal symbol (*1)
- GT: Symbol for clearance in the axial direction (*2)
- +165L: Overall screw shaft length (in mm)
- C5: Accuracy symbol (*3)
- A: Unfinished shaft ends code

(*1) See A15-334. (*2) See A15-19. (*3) See A15-12.

Download data by searching for the corresponding model number on the Technical Support site. https://tech.thk.com

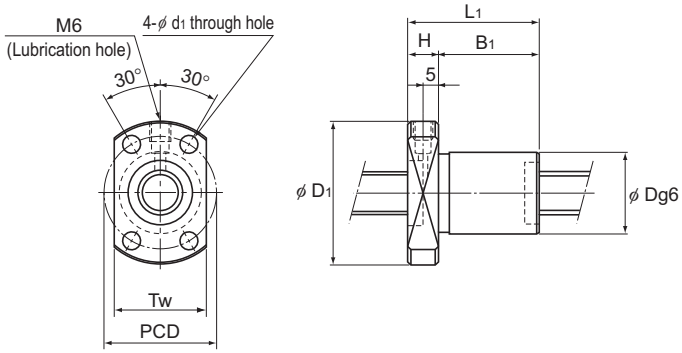

MDK1405

Unit: mm

Dimensions					Screw shaft dimensions									Nut mass	Shaft mass	Permissible rotational speed
	B_1	PCD	d_1	Tw	Unfinished Shaft End Code	Overall length L	ℓ_0	ℓ_1	ℓ_2	ℓ_3	d_3	d_4	K	kg	kg/m	min^{-1}
	17	28	4.5	23	A	165	86	15	60	90	14.2	11	4	0.05	0.71	3500
						215	136			140						
						265	186			190						
						315	236			240						
						365	286			290						
	17	31	5.5	26	A	175	86	25	60	90	15.2	13	4	0.07	1	3500
						225	136			140						
						275	186			190						
						325	236			240						
						425	336			340						
	27	36	5.5	28	A	240	150	25	60	155	15.2	11.9	5	0.14	0.8	3500
						290	200			205						
						340	250			255						
						440	350			355						
						540	450			455						
	32	36	5.5	28	A	250	160	25	60	165	14	11.2	5	0.19	1.2	4740
						300	210			215						
						350	260			265						
						450	360			365						
						550	460			465						

Options⇒A15-333

MDK
No Preload

DN value	70000

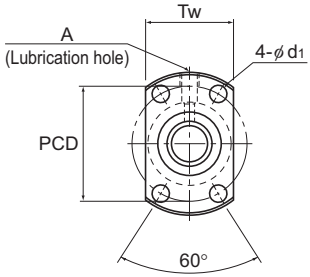

Model No.	Screw shaft outer diameter	Lead	Ball center-to-center diameter	Thread minor diameter	No. of loaded circuits	Basic load rating		Rigidity			
						Ca	C_0a	K	Outer diameter	Flange diameter	Overall length
	d	Ph	dp	dc	Rows × turns	kN	kN	N/μm	D	D_1	L_1
MDK 0401-3	4	1	4.15	3.4	3×1	0.29	0.42	35	9	19	13
MDK 0601-3	6	1	6.2	5.3	3×1	0.54	0.94	60	11	23	14.5
MDK 0801-3	8	1	8.2	7.3	3×1	0.64	1.4	80	13	26	15
MDK 0802-3	8	2	8.3	7	3×1	1.4	2.3	80	15	28	22
MDK 1002-3	10	2	10.3	9	3×1	1.5	2.9	100	17	34	22
MDK 1202-3	12	2	12.3	11	3×1	1.7	3.6	120	19	36	22
MDK 1402-3	14	2	14.3	13	3×1	1.8	4.3	190	21	40	23
MDK 1404-3	14	4	14.65	12.2	3×1	4.2	7.6	190	26	45	33
MDK 1405-3	14	5	14.75	11.2	3×1	7	11.6	140	26	45	42

Download data by searching for the corresponding model number on the Technical Support site. https://tech.thk.com

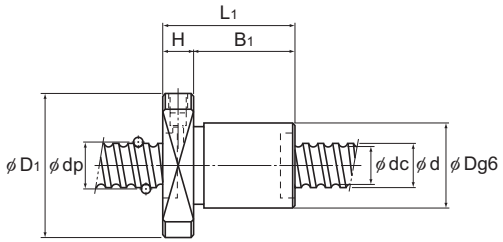

Unit: mm

Nut dimensions						Screw shaft inertial moment/mm	Nut mass	Shaft mass	Permissible rotational speed
H	B_1	PCD	d_1	Tw	Lubrication hole A	$kg \cdot m^2/mm$	kg	kg/m	min^{-1}
3	10	14	2.9	13	—	1.97×10^{-10}	0.01	0.07	3500
3.5	11	17	3.4	15	—	9.99×10^{-10}	0.017	0.14	3500
4	11	20	3.4	17	—	3.16×10^{-9}	0.024	0.29	3500
5	17	22	3.4	19	—	3.16×10^{-9}	0.034	0.27	3500
5	17	26	4.5	21	—	7.71×10^{-9}	0.045	0.47	3500
5	17	28	4.5	23	—	1.60×10^{-8}	0.05	0.71	3500
6	17	31	5.5	26	—	2.96×10^{-8}	0.15	1	3500
6	27	36	5.5	28	—	2.96×10^{-8}	0.13	0.8	3500
10	32	36	5.5	28	M6	2.96×10^{-8}	0.18	0.91	4740

Note) Models MDK0401, 0601 and 0801 are not provided with a seal.

Options⇒A15-333

MBF (Unfinished Shaft Ends)
No Preload

DN value	70000

2-ø d_1 through hole, ø d_2 counter bore depth h

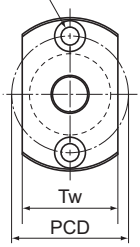

Model No.	Ball screw specifications							Nut			
	Screw shaft outer diameter	Lead	Ball center-to-center diameter	Thread minor diameter	No. of loaded circuits	Basic load rating		Outer diameter	Flange diameter	Overall length	
						Ca	C_0a				
	d	Ph	dp	dc	Rows × turns	kN	kN	D	D_1	L_1	H
MBF 0401-3.7	4	1	4.15	3.3	1×3.7	0.59	0.93	11	24	18	4
MBF 0601-3.7	6	1	6.15	5.3	1×3.7	0.74	1.5	13	30	21	5
MBF 0802-3.7	8	2	8.3	6.6	1×3.7	2.5	4.2	20	40	28	6
MBF 1002-3.7	10	2	10.3	8.6	1×3.7	2.8	5.3	23	43	28	6
MBF 1202-3.7	12	2	12.3	10.6	1×3.7	3	6.5	25	47	30	8
MBF 1402-3.7	14	2	14.3	12.6	1×3.7	3.3	7.5	26	48	30	8
MBF 1404-3.7	14	4	14.3	11.8	1×3.7	5.7	11.1	30	54	38	8

Model number coding

MBF0802-3.7 RR GT +218L C5 A

- MBF0802-3.7: Model No.
- RR: Seal symbol (*1)
- GT: Symbol for clearance in the axial direction (*2)
- +218L: Overall screw shaft length (in mm)
- C5: Accuracy symbol (*3)
- A: Unfinished shaft ends code

(*1) See A15-334. (*2) See A15-19. (*3) See A15-12.

Download data by searching for the corresponding model number on the Technical Support site. https://tech.thk.com

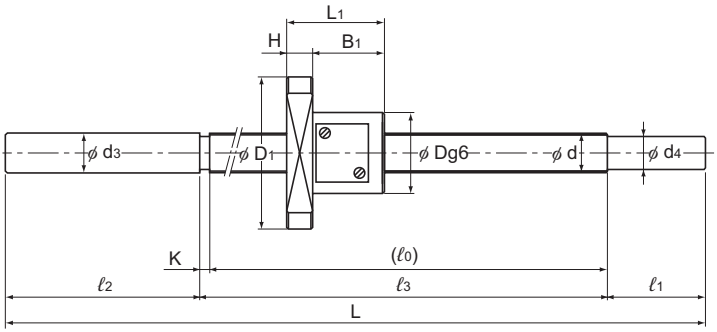

Unit: mm

Dimensions							Screw shaft dimensions									Nut mass	Shaft mass	Permissible rotational speed
B_1	PCD	d_1	d_2	h	Tw	Unfinished Shaft End Code	Overall length L	ℓ_0	ℓ_1	ℓ_2	ℓ_3	d_3	d_4	K	kg	kg/m	min^{-1}
14	17	3.4	6.5	2.5	13	A	90	48	10	30	50	4.3	3.2	2	0.02	0.07	3500
							110	68			70						
							130	88			90						
16	21.5	3.4	6.5	3	17	A	131	58	20	50	61	6.3	5.2	3	0.04	0.14	3500
							161	88			91						
							201	128			131						
22	30	4.5	8	4	24	A	168	85	25	55	88	8.3	6.2	3	0.1	0.19	3500
							193	110			113						
							218	135			138						
22	33	4.5	8	4	27	A	183	95	25	60	98	10.3	8.2	3	0.11	0.36	3500
							223	135			138						
							273	185			188						
22	36	5.5	9.5	5.5	29	A	210	117	30	60	120	12.3	10.2	3	0.15	0.58	3500
							235	142			145						
							285	192			195						
22	37	5.5	9.5	5.5	32	A	205	102	40	60	105	14.3	12.2	3	0.16	0.85	3500
							245	142			145						
							295	192			195						
							345	242			245						
30	42	5.5	9.5	5.5	34	A	233	129	40	60	133	14.3	11.2	4	0.25	1.2	3500
							293	189			193						
							353	249			253						
							413	309			313						

Note) The standard specification for the Model MBF is with no seal. Please contact THK if you are interested in attaching a seal.

Options⇒A15-333

MBF
No Preload

DN value	70000

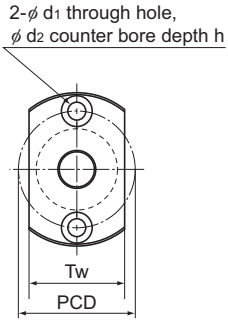

Nut type Ⅰ

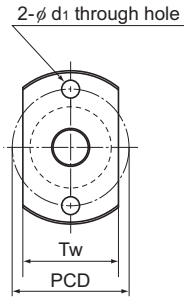

Nut type Ⅱ

Model No.	Screw shaft outer diameter	Lead	Ball center-to-center diameter	Thread minor diameter	No. of loaded circuits	Basic load rating		Rigidity
						Ca	C_0a	K
	d	Ph	dp	dc	Rows × turns	kN	kN	N/μm
MBF0401-3.7	4	1	4.15	3.3	1×3.7	0.59	0.93	54
MBF0601-3.7	6	1	6.15	5.3	1×3.7	0.74	1.5	75
MBF0602-2.7	6	2	6.2	5.1	1×2.7	0.75	1.2	58
MBF0602.5-2.7	6	2.5	6.2	5.1	1×2.7	0.75	1.2	59
MBF0801.5-3.7	8	1.5	8.2	7.1	1×3.7	1.1	2.2	99
MBF0802-3.7	8	2	8.3	6.6	1×3.7	2.5	4.2	111
MBF0802.5-3.7	8	2.5	8.3	6.6	1×3.7	2.4	4.1	111
MBF0803-2.7	8	3	8.3	6.2	1×2.7	2.6	4.2	85
MBF0804-2.7	8	4	8.3	6.2	1×2.7	2.6	4.2	84
MBF1001-3.7	10	1	10.15	9.3	1×3.7	0.84	2	113
MBF1001.5-3.7	10	1.5	10.2	9.1	1×3.7	1.25	2.8	120
MBF1002-3.7	10	2	10.3	8.6	1×3.7	2.8	5.3	134
MBF1002.5-3.7	10	2.5	10.3	8.6	1×3.7	2.7	5.3	133
MBF1003-3.7	10	3	10.3	8.2	1×3.7	3.9	7.2	140
MBF1005-2.7	10	5	10.3	8.2	1×2.7	3	5.2	103
MBF1202-3.7	12	2	12.3	10.6	1×3.7	3	6.5	156
MBF1202.5-3.7	12	2.5	12.3	10.6	1×3.7	3	6.4	156
MBF1203-3.7	12	3	12.3	10.2	1×3.7	4.3	8.7	162
MBF1204-3.7	12	4	12.3	9.8	1×3.7	5.4	10.2	165
MBF1402-3.7	14	2	14.3	12.6	1×3.7	3.3	7.5	176
MBF1404-3.7	14	4	14.3	11.8	1×3.7	5.7	11.1	187

Note) The standard specifi cation for the Model MBF is with no seal. Please contact THK if you are interested in attaching a seal.
The Model MBF can support an axial clearance of 0 or less. Please contact THK if you would like to use it in this manner.

Download data by searching for the corresponding model number on the Technical Support site. https://tech.thk.com

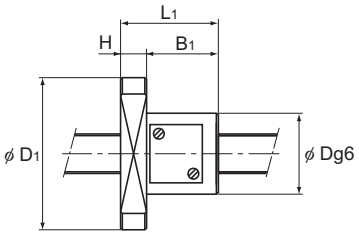

Unit: mm

	Nut dimensions											Screw shaft inertial moment/mm	Nut mass	Shaft mass	Permissible rotational speed
	Outer diameter D	Flange diameter D_1	Overall length L_1	H	B_1	PCD	d_1	d_2	h	Nut type	Tw	$kg \cdot m^2/mm$	kg	kg/m	min^{-1}
	11	24	18	4	14	17	3.4	6.5	2.5	I	13	1.97×10^{-10}	0.02	0.07	3500
	13	30	21	5	16	21.5	3.4	6.5	3	I	17	9.99×10^{-10}	0.04	0.14	3500
	15	29	17	4	13	23	3.4	—	—	II	17	9.99×10^{-10}	0.03	0.21	3500
	15	29	18	4	14	23	3.4	—	—	II	17	9.99×10^{-10}	0.03	0.21	3500
	16	30	19	4	15	24	3.4	—	—	II	18	3.16×10^{-9}	0.03	0.36	3500
	20	40	28	6	22	30	4.5	8	4	I	24	3.16×10^{-9}	0.1	0.19	3500
	20	38	26	5	21	30	4.5	—	—	II	22	3.16×10^{-9}	0.07	0.34	3500
	20	38	25	5	20	30	4.5	—	—	II	22	3.16×10^{-9}	0.06	0.32	3500
	21	39	28	5	23	31	4.5	—	—	II	23	3.16×10^{-9}	0.08	0.34	3500
	19	37	18	5	13	29	4.5	—	—	II	21	7.71×10^{-9}	0.04	0.57	3500
	19	37	20	5	15	29	4.5	—	—	II	21	7.71×10^{-9}	0.04	0.57	3500
	23	43	28	6	22	33	4.5	8	4	I	27	7.71×10^{-9}	0.11	0.36	3500
	24	44	27	6	21	35	5.5	—	—	II	26	7.71×10^{-9}	0.09	0.55	3500
	24	44	30	6	24	35	5.5	—	—	II	26	7.71×10^{-9}	0.1	0.52	3500
	24	44	34	6	28	35	5.5	—	—	II	26	7.71×10^{-9}	0.12	0.56	3500
	25	47	30	8	22	36	5.5	9.5	5.5	I	29	1.60×10^{-8}	0.15	0.58	3500
	26	46	27	6	21	37	5.5	—	—	II	28	1.60×10^{-8}	0.11	0.8	3500
	28	48	30	6	24	39	5.5	—	—	II	30	1.60×10^{-8}	0.14	0.77	3500
	28	48	33	6	27	39	5.5	—	—	II	30	1.60×10^{-8}	0.15	0.76	3500
	26	48	30	8	22	37	5.5	9.5	5.5	I	32	2.96×10^{-8}	0.16	0.85	3500
	30	54	38	8	30	42	5.5	9.5	5.5	I	34	2.96×10^{-8}	0.25	1.2	3500

Options⇒A15-333

BNF-V Small
No Preload

DN value	100000

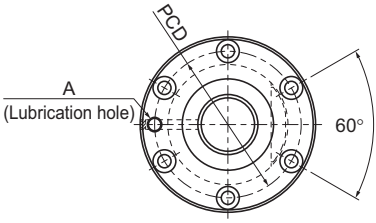

Model No.	Screw shaft outer diameter	Lead	Ball center-to-center diameter	Thread minor diameter	No. of loaded circuits	Basic load rating		Rigidity
						Ca	C_0a	K
	d	Ph	dp	dc	Rows × turns	kN	kN	N/μm
BNF 1604V-5	16	4	16.5	13.8	2×2.5	7.8	17.4	290
BNF 1605V-2.5	16	5	16.75	13.2	1×2.5	7.4	13.9	170
BNF 1605V-5	16	5	16.75	13.2	2×2.5	13.5	27.9	320
BNF 2004V-2.5	20	4	20.5	17.8	1×2.5	4.8	10.9	180
BNF 2004V-5	20	4	20.5	17.8	2×2.5	8.6	21.8	350
BNF 2005V-2.5	20	5	20.75	17.2	1×2.5	8.3	17.5	200
BNF 2005V-5	20	5	20.75	17.2	2×2.5	15.1	35	380
BNF 2010V-2.5	20	10	20.75	17.2	1×2.5	8.3	17.6	197
BNF 2504V-2.5	25	4	25.5	22.8	1×2.5	5.2	13.7	210
BNF 2504V-5	25	4	25.5	22.8	2×2.5	9.5	27.4	410
BNF 2505V-2.5	25	5	25.75	22.2	1×2.5	9.2	21.9	240
BNF 2505V-5	25	5	25.75	22.2	2×2.5	16.7	43.9	460
BNF 2506V-2.5	25	6	26	21.4	1×2.5	12.4	27.4	250
BNF 2506V-5	25	6	26	21.4	2×2.5	22.6	54.8	470
BNF 2805V-2.5	28	5	28.75	25.2	1×2.5	9.7	24.6	250
BNF 2805V-5	28	5	28.75	25.2	2×2.5	17.5	49.2	500
BNF 2805V-7.5	28	5	28.75	25.2	3×2.5	24.8	73.8	740
BNF 2806V-2.5	28	6	28.75	25.2	1×2.5	9.6	24.6	250
BNF 2806V-5	28	6	28.75	25.2	2×2.5	17.5	49.2	500
BNF 2806V-7.5	28	6	28.75	25.2	3×2.5	24.8	73.8	740
BNF 3205V-2.5	32	5	32.75	29.2	1×2.5	10.2	28.1	280
BNF 3205V-5	32	5	32.75	29.2	2×2.5	18.5	56.3	560
BNF 3205V-7.5	32	5	32.75	29.2	3×2.5	26.2	84.4	810
BNF 3206V-2.5	32	6	33	28.4	1×2.5	13.9	35.2	290
BNF 3206V-5	32	6	33	28.4	2×2.5	25.2	70.3	580

Download data by searching for the corresponding model number on the Technical Support site. https://tech.thk.com

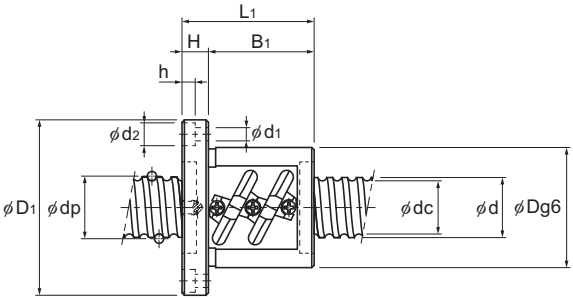

Unit: mm

	Nut dimensions								Screw shaft inertial moment/mm	Nut mass	Shaft mass	Permissible rotational speed
	Outer diameter	Flange diameter	Overall length					Lubrication hole				
	D	D_1	L_1	H	B_1	PCD	$d_1 \times d_2 \times h$	A	$kg \cdot m^2/mm$	kg	kg/m	min^{-1}
	36	59	53	11	42	47	5.5×9.5×5.5	M6	5.05×10^{-8}	0.42	1.42	5000
	40	60	41	10	31	50	4.5×8×4.5	M6	5.05×10^{-8}	0.37	1.37	5000
	40	60	56	10	46	50	4.5×8×4.5	M6	5.05×10^{-8}	0.49	1.37	5000
	40	63	37	11	26	51	5.5×9.5×5.5	M6	1.23×10^{-7}	0.3	2.22	4870
	40	63	49	11	38	51	5.5×9.5×5.5	M6	1.23×10^{-7}	0.49	2.22	4870
	44	67	41	11	30	55	5.5×9.5×5.5	M6	1.23×10^{-7}	0.46	2.19	4810
	44	67	56	11	45	55	5.5×9.5×5.5	M6	1.23×10^{-7}	0.6	2.19	4810
	46	74	58	15	43	59	5.5×9.5×5.5	M6	1.23×10^{-7}	0.68	2.46	4810
	46	69	36	11	25	57	5.5×9.5×5.5	M6	3.01×10^{-7}	0.21	3.6	3920
	46	69	48	11	37	57	5.5×9.5×5.5	M6	3.01×10^{-7}	0.55	3.6	3920
	50	73	40	11	29	61	5.5×9.5×5.5	M6	3.01×10^{-7}	0.52	3.52	3880
	50	73	55	11	44	61	5.5×9.5×5.5	M6	3.01×10^{-7}	0.68	3.52	3880
	53	76	44	11	33	64	5.5×9.5×5.5	M6	3.01×10^{-7}	0.61	3.43	3840
	53	76	62	11	51	64	5.5×9.5×5.5	M6	3.01×10^{-7}	0.91	3.43	3840
	55	85	44	12	32	69	6.6×11×6.5	M6	4.74×10^{-7}	1.02	4.45	3470
	55	85	59	12	47	69	6.6×11×6.5	M6	4.74×10^{-7}	1.06	4.45	3470
	55	85	74	12	62	69	6.6×11×6.5	M6	4.74×10^{-7}	1.16	4.45	3470
	55	85	50	12	38	69	6.6×11×6.5	M6	4.74×10^{-7}	0.87	4.52	3470
	55	85	68	12	56	69	6.6×11×6.5	M6	4.74×10^{-7}	1.09	4.52	3470
	55	85	86	12	74	69	6.6×11×6.5	M6	4.74×10^{-7}	1.3	4.52	3470
	58	85	41	12	29	71	6.6×11×6.5	M6	8.08×10^{-7}	0.76	5.89	3050
	58	85	56	12	44	71	6.6×11×6.5	M6	8.08×10^{-7}	0.94	5.89	3050
	58	85	71	12	59	71	6.6×11×6.5	M6	8.08×10^{-7}	1.13	5.89	3050
	62	89	45	12	33	75	6.6×11×6.5	M6	8.08×10^{-7}	0.94	5.88	3030
	62	89	63	12	51	75	6.6×11×6.5	M6	8.08×10^{-7}	1.21	5.88	3030

Note)The overall length of the nut will increase when equipping the QZ lubricating device. See **A15-344** for further details.

Options⇒A15-333

BNF-V Medium
No Preload

DN value	130000

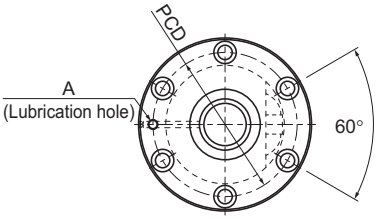

Model No.	Screw shaft outer diameter	Lead	Ball center-to-center diameter	Thread minor diameter	No. of loaded circuits	Basic load rating		Rigidity
						Ca	C_0a	K
	d	Ph	dp	dc	Rows × turns	kN	kN	N/μm
BNF 2508V-2.5	25	8	26.25	20.5	1×2.5	15.8	32.9	250
BNF 2508V-3.5	25	8	26.25	20.5	1×3.5	21.1	46	340
BNF 2508V-5	25	8	26.25	20.5	2×2.5	28.7	65.7	480
BNF 2510V-2.5	25	10	26.25	21.5	1×2.5	15.8	32.9	250
BNF 2810V-2.5	28	10	29.75	22.4	1×2.5	24.3	49	280
BNF 3210V-2.5	32	10	33.75	26.4	1×2.5	26	56.2	310
BNF 3210V-3.5	32	10	33.75	26.4	1×3.5	34.8	78.6	440
BNF 3210V-5	32	10	33.75	26.4	2×2.5	47.3	112.3	620
BNF 3212V-3.5	32	12	34	26.1	1×3.5	40.4	88.5	440
BNF 3216V-5	32	16	33.75	26.4	2×2.5	47.1	113.1	616
BNF 3610V-2.5	36	10	37.75	30.5	1×2.5	27.6	63.3	350
BNF 3610V-5	36	10	37.75	30.5	2×2.5	50.1	126.5	680
BNF 3610V-7.5	36	10	37.75	30.5	3×2.5	71	189.8	990
BNF 3612V-2.5	36	12	38	30.1	1×2.5	32.2	71.2	350
BNF 3612V-5	36	12	38	30.1	2×2.5	58.4	142.3	690
BNF 3616V-2.5	36	16	38	30.1	1×2.5	32.1	71.5	350
BNF 3620V-1.5	36	20	37.75	30.5	1×1.5	17.7	38.4	215
BNF 4010V-2.5	40	10	41.75	34.4	1×2.5	29	70.4	380
BNF 4010V-3.5	40	10	41.75	34.4	1×3.5	38.8	98.5	520
BNF 4010V-5	40	10	41.75	34.4	2×2.5	52.7	140.7	740
BNF 4012V-2.5	40	12	42	34.1	1×2.5	33.9	79.2	390
BNF 4012V-3.5	40	12	42	34.1	1×3.5	45.3	110.8	530
BNF 4012V-5	40	12	42	34.1	2×2.5	61.6	158.3	750
BNF 4016V-5	40	16	42	34.1	2×2.5	61.5	158.8	740
BNF 4020V-5	40	20	41.75	34.4	2×2.5	52.4	142	736

Download data by searching for the corresponding model number on the Technical Support site. https://tech.thk.com

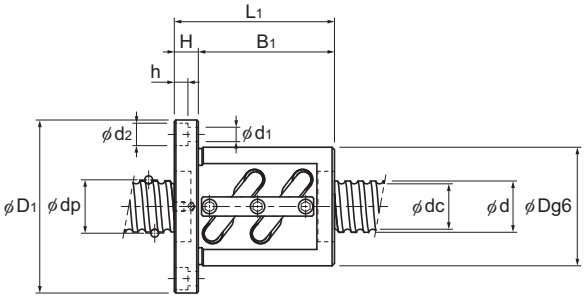

Unit: mm

	Nut dimensions								Screw shaft inertial moment/mm	Nut mass	Shaft mass	Permissible rotational speed
	Outer diameter	Flange diameter	Overall length					Lubrication hole				
	D	D_1	L_1	H	B_1	PCD	$d_1 \times d_2 \times h$	A	$kg \cdot m^2/mm$	kg	kg/m	min^{-1}
	58	85	58	15	43	71	6.6×11×6.5	M6	3.01×10^{-7}	1.07	3.51	4950
	58	85	66	15	51	71	6.6×11×6.5	M6	3.01×10^{-7}	1.29	3.51	4950
	58	85	82	15	67	71	6.6×11×6.5	M6	3.01×10^{-7}	1.44	3.51	4950
	58	85	70	18	52	71	6.6×11×6.5	M6	3.01×10^{-7}	1.43	3.5	4950
	65	106	86	18	68	85	11×17.5×11	M6	4.74×10^{-8}	2.3	4.15	4360
	74	108	70	15	55	90	9×14×8.5	M6	8.08×10^{-7}	2.2	5.53	3850
	74	108	80	15	65	90	9×14×8.5	M6	8.08×10^{-7}	2.44	5.53	3850
	74	108	100	15	85	90	9×14×8.5	M6	8.08×10^{-7}	2.92	5.53	3850
	76	121	98	18	80	98	11×17.5×11	M6	8.08×10^{-7}	3.4	5.7	3820
	74	108	139	18	121	90	9×14×8.5	M6	8.08×10^{-7}	3.81	5.82	3850
	75	120	81	18	63	98	11×17.5×11	M6	1.29×10^{-6}	2.75	7.1	3440
	75	120	111	18	93	98	11×17.5×11	M6	1.29×10^{-6}	3.45	7.1	3440
	75	120	141	18	123	98	11×17.5×11	M6	1.29×10^{-6}	4.15	7.1	3440
	78	123	87	18	69	100	11×17.5×11	M6	1.29×10^{-6}	3.14	7.99	3420
	78	123	123	18	105	100	11×17.5×11	M6	1.29×10^{-6}	4.07	7.99	3420
	78	123	92	18	74	100	11×17.5×11	M6	1.29×10^{-6}	3.27	7.99	3420
	75	114	82	18	64	93	11×17.5×11	M6	1.29×10^{-6}	2.38	7.54	3440
	82	124	73	18	55	102	11×17.5×11	M6	1.97×10^{-6}	2.86	8.87	3110
	82	124	83	18	65	102	11×17.5×11	M6	1.97×10^{-6}	3.14	8.87	3110
	82	124	103	18	85	102	11×17.5×11	M6	1.97×10^{-6}	3.69	8.87	3110
	84	126	83	18	65	104	11×17.5×11	M6	1.97×10^{-6}	3.31	8.83	3090
	84	126	95	18	77	104	11×17.5×11	M6	1.97×10^{-6}	3.66	8.83	3090
	84	126	119	18	101	104	11×17.5×11	M6	1.97×10^{-6}	4.36	8.83	3090
	84	126	144	18	126	104	11×17.5×11	M6	1.97×10^{-6}	5.52	9.09	3090
	82	126	162	18	144	104	11×17.5×11	M6	1.97×10^{-6}	5.17	9.37	3110

Note)The overall length of the nut will increase when equipping the QZ lubricating device. See A15-344 for further details.

Options⇒A15-333

BNF-V Medium No Preload

DN value	130000

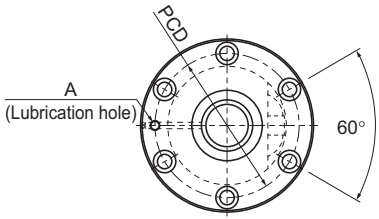

Model No.	Screw shaft outer diameter	Lead	Ball center-to-center diameter	Thread minor diameter	No. of loaded circuits	Basic load rating		Rigidity
						Ca	C_0a	K
	d	Ph	dp	dc	Rows × turns	kN	kN	N/μm
BNF 4510V-2.5	45	10	46.75	39.5	1×2.5	30.6	79.3	420
BNF 4510V-3	45	10	46.75	39.5	2×1.5	35.8	95.1	500
BNF 4510V-5	45	10	46.75	39.5	2×2.5	55.6	158.5	800
BNF 4510V-7.5	45	10	46.75	39.5	3×2.5	78.8	237.8	1190
BNF 4512V-5	45	12	47	39.2	2×2.5	65.2	178.3	820
BNF 4520V-2.5	45	20	47	39.2	1×2.5	35.8	89.7	424
BNF 5010V-2.5	50	10	51.75	44.4	1×2.5	32.1	88.1	450
BNF 5010V-3.5	50	10	51.75	44.4	1×3.5	42.9	123.4	620
BNF 5010V-5	50	10	51.75	44.4	2×2.5	58.2	176.3	880
BNF 5010V-7.5	50	10	51.75	44.4	3×2.5	82.5	264.4	1290
BNF 5012V-2.5	50	12	52.25	43.3	1×2.5	43.4	110.1	470
BNF 5012V-3.5	50	12	52.25	43.3	1×3.5	58	154.1	640
BNF 5012V-5	50	12	52.25	43.3	2×2.5	78.8	220.2	910
BNF 5016V-2.5	50	16	52.7	42.9	1×2.5	72.6	183.1	620
BNF 5016V-5	50	16	52.7	42.9	2×2.5	131.8	366.2	1180
BNF 5020V-2.5	50	20	52.7	42.9	1×2.5	72.5	183.6	620

Download data by searching for the corresponding model number on the Technical Support site. https://tech.thk.com

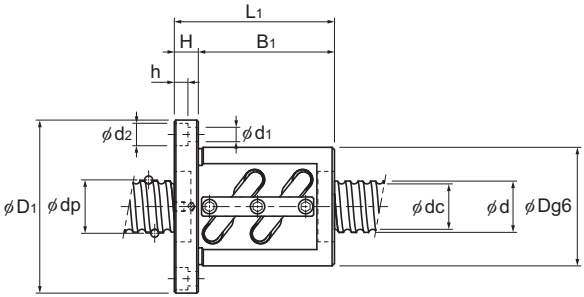

Unit: mm

	Nut dimensions								Screw shaft inertial moment/mm	Nut mass	Shaft mass	Permissible rotational speed
	Outer diameter D	Flange diameter D_1	Overall length L_1	H	B_1	PCD	$d_1 \times d_2 \times h$	Lubrication hole A	$kg \cdot m^2/mm$	kg	kg/m	min^{-1}
	88	132	81	18	63	110	11×17.5×11	Rc1/8 (PT1/8)	3.16×10^{-6}	3.43	11.36	2780
	88	132	94	18	76	110	11×17.5×11		3.16×10^{-6}	3.83	11.36	2780
	88	132	111	18	93	110	11×17.5×11		3.16×10^{-6}	4.35	11.36	2780
	88	132	141	18	123	110	11×17.5×11		3.16×10^{-6}	5.26	11.36	2780
	90	130	119	18	101	110	11×17.5×11		3.16×10^{-6}	4.74	11.32	2760
	90	130	102	18	84	110	11×17.5×11		3.16×10^{-6}	4.28	11.1	2760
	93	135	73	18	55	113	11×17.5×11		4.82×10^{-6}	3.33	14.16	2510
	93	135	83	18	65	113	11×17.5×11		4.82×10^{-6}	3.66	14.16	2510
	93	135	103	18	85	113	11×17.5×11		4.82×10^{-6}	4.31	14.16	2510
	93	135	133	18	115	113	11×17.5×11		4.82×10^{-6}	5.28	14.16	2510
	100	146	87	22	65	122	14×20×13		4.82×10^{-6}	4.57	13.82	2480
	100	146	99	22	77	122	14×20×13		4.82×10^{-6}	5.05	13.82	2480
	100	146	123	22	101	122	14×20×13		4.82×10^{-6}	6.02	13.82	2480
	105	152	116	25	91	128	14×20×13		4.82×10^{-6}	6.98	13.71	2460
	105	152	164	25	139	128	14×20×13		4.82×10^{-6}	9.18	13.71	2460
	105	152	141	28	113	128	14×20×13		4.82×10^{-6}	8.32	14.05	2460

Note)The overall length of the nut will increase when equipping the QZ lubricating device. See A15-344 for further details.

Options⇒A15-333

BNF
No Preload

DN value	70000

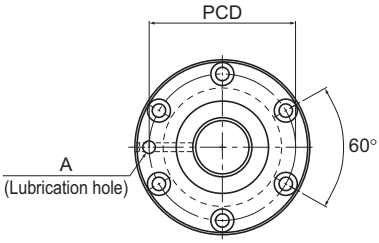

Model No.	Screw shaft outer diameter	Lead	Ball center-to-center diameter	Thread minor diameter	No. of loaded circuits	Basic load rating		Rigidity
						Ca	C₀a	K
	d	Ph	dp	dc	Rows × turns	kN	kN	N/μm
BNF 5510-2.5	55	10	56.75	49.5	1×2.5	33.4	97	490
BNF 5510-5	55	10	56.75	49.5	2×2.5	60.7	194	950
BNF 5510-7.5	55	10	56.75	49.5	3×2.5	85.9	291.1	1390
BNF 5512-2.5	55	12	57	49.2	1×2.5	39.3	108.8	500
BNF 5512-3	55	12	57	49.2	2×1.5	46	131.3	590
BNF 5512-3.5	55	12	57	49.2	1×3.5	52.4	152.9	680
BNF 5512-5	55	12	57	49.2	2×2.5	71.3	218.5	960
BNF 5512-7.5	55	12	57	49.2	3×2.5	100.9	327.3	1420
BNF 5516-2.5	55	16	57.7	47.9	1×2.5	76.1	201.9	650
BNF 5516-5	55	16	57.7	47.9	2×2.5	138.2	402.8	1280
BNF 5520-2.5	55	20	57.7	47.9	1×2.5	76	201.9	660
BNF 5520-5	55	20	57.7	47.9	2×2.5	138.2	403.8	1280
BNF 6310-2.5	63	10	64.75	57.7	1×2.5	35.4	111.7	550
BNF 6310-5	63	10	64.75	57.7	2×2.5	64.2	222.5	1050
BNF 6310-7.5	63	10	64.75	57.7	3×2.5	90.9	334.2	1550
BNF 6312A-2.5	63	12	65.25	56.3	1×2.5	48.1	139.2	560
BNF 6312A-5	63	12	65.25	56.3	2×2.5	87.4	278.3	1090
BNF 6316-5	63	16	65.7	55.9	2×2.5	147	462.6	1420
BNF 6320-2.5	63	20	65.7	55.9	1×2.5	81	231.3	740
BNF 6320-5	63	20	65.7	55.9	2×2.5	147	463.5	1420

Note)The model numbers in dimmed type indicate semi-standard types.
If desiring them, contact THK.

Download data by searching for the corresponding model number on the Technical Support site. https://tech.thk.com

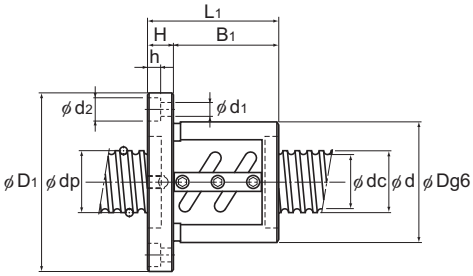

Unit: mm

	Nut dimensions								Screw shaft inertial moment/mm	Nut mass	Shaft mass	Permissible rotational speed
	Outer diameter	Flange diameter	Overall length					Lubrication hole				
	D	D_1	L_1	H	B_1	PCD	$d_1 \times d_2 \times h$	A	$kg \cdot m^2/mm$	kg	kg/m	min^{-1}
	102	144	81	18	63	122	11×17.5×11	Rc1/8 (PT1/8)	7.05×10^{-6}	4.19	16.43	1230
	102	144	111	18	93	122	11×17.5×11		7.05×10^{-6}	5.36	16.43	1230
	102	144	141	18	123	122	11×17.5×11		7.05×10^{-6}	6.54	16.43	1230
	105	147	93	18	75	125	11×17.5×11		7.05×10^{-6}	5.01	16.29	1220
	105	147	107	18	89	125	11×17.5×11		7.05×10^{-6}	5.6	16.29	1220
	105	147	105	18	87	125	11×17.5×11		7.05×10^{-6}	5.52	16.29	1220
	105	147	129	18	111	125	11×17.5×11		7.05×10^{-6}	6.54	16.29	1220
	105	147	165	18	147	125	11×17.5×11		7.05×10^{-6}	8.07	16.29	1220
	110	158	116	25	91	133	14×20×13		7.05×10^{-6}	7.4	15.46	1210
	110	158	164	25	139	133	14×20×13		7.05×10^{-6}	9.73	15.46	1210
	112	158	127	28	99	134	14×20×13		7.05×10^{-6}	8.4	16.1	1210
	112	158	187	28	159	134	14×20×13		7.05×10^{-6}	11.45	16.1	1210
	108	154	77	22	55	130	14×20×13		1.21×10^{-5}	4.57	21.93	1080
	108	154	107	22	85	130	14×20×13		1.21×10^{-5}	5.77	21.93	1080
	108	154	137	22	115	130	14×20×13		1.21×10^{-5}	6.98	21.93	1080
	115	161	87	22	65	137	14×20×13		1.21×10^{-5}	5.8	21.14	1070
	115	161	123	22	101	137	14×20×13		1.21×10^{-5}	7.56	21.14	1070
	122	184	160	24	136	152	18×26×17.5		1.21×10^{-5}	11.82	20.85	1060
	122	180	127	28	99	150	18×26×17.5		1.21×10^{-5}	10.1	21.57	1060
	122	180	187	28	159	150	18×26×17.5		1.21×10^{-5}	13.58	21.57	1060

Note)The overall length of the nut will increase when equipping the QZ lubricating device. See **A15-344** for further details.

Options⇒A15-333

BNF
No Preload

DN value	70000

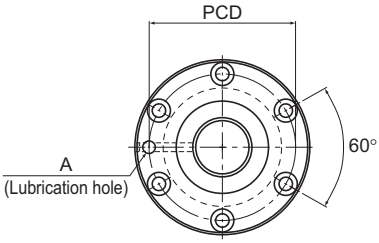

Model No.	Screw shaft outer diameter	Lead	Ball center-to-center diameter	Thread minor diameter	No. of loaded circuits	Basic load rating		Rigidity
						Ca	C₀a	K
	d	Ph	dp	dc	Rows × turns	kN	kN	N/μm
BNF 7010-2.5	70	10	71.75	64.5	1×2.5	36.8	123.5	590
BNF 7010-5	70	10	71.75	64.5	2×2.5	66.9	247	1140
BNF 7010-7.5	70	10	71.75	64.5	3×2.5	94.9	371.4	1680
BNF 7012-2.5	70	12	72	64.2	1×2.5	43.5	139.2	600
BNF 7012-5	70	12	72	64.2	2×2.5	78.9	278.3	1160
BNF 7012-7.5	70	12	72	64.2	3×2.5	111.7	417.5	1710
BNF 7020-5	70	20	72.7	62.9	2×2.5	153.9	514.5	1550
BNF 8010-2.5	80	10	81.75	75.2	1×2.5	38.9	141.1	650
BNF 8010-5	80	10	81.75	75.2	2×2.5	70.6	283.2	1270
BNF 8010-7.5	80	10	81.75	75.2	3×2.5	100	424.3	1860
BNF 8020A-2.5	80	20	82.7	72.9	1×2.5	90.1	294	890
BNF 8020A-5	80	20	82.7	72.9	2×2.5	163.7	589	1720
BNF 8020A-7.5	80	20	82.7	72.9	3×2.5	231.6	883.2	2520
BNF 10020A-2.5	100	20	102.7	92.9	1×2.5	99	368.5	2110
BNF 10020A-5	100	20	102.7	92.9	2×2.5	179.3	737	4080
BNF 10020A-7.5	100	20	102.7	92.9	3×2.5	253.8	1105.4	6010

Note)The model numbers in dimmed type indicate semi-standard types.
If desiring them, contact THK.

Download data by searching for the corresponding model number on the Technical Support site. https://tech.thk.com

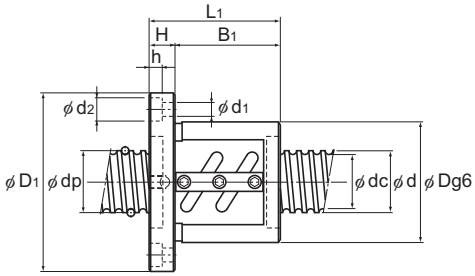

Unit: mm

	Nut dimensions								Screw shaft inertial moment/mm	Nut mass	Shaft mass	Permissible rotational speed
	Outer diameter	Flange diameter	Overall length					Lubrication hole				
	D	D_1	L_1	H	B_1	PCD	$d_1 \times d_2 \times h$	A	$kg \cdot m^2/mm$	kg	kg/m	min^{-1}
	125	167	81	18	63	145	11×17.5×11	Rc1/8 (PT1/8)	1.85×10^{-5}	5.8	27.4	970
	125	167	111	18	93	145	11×17.5×11		1.85×10^{-5}	7.49	27.4	970
	125	167	141	18	123	145	11×17.5×11		1.85×10^{-5}	9.19	27.4	970
	128	170	93	18	75	148	11×17.5×11		1.85×10^{-5}	6.89	27.24	970
	128	170	129	18	111	148	11×17.5×11		1.85×10^{-5}	9.08	27.24	970
	128	170	165	18	147	148	11×17.5×11		1.85×10^{-5}	11.26	27.24	970
	130	186	185	28	157	158	18×26×17.5		1.85×10^{-5}	14.5	27	960
	130	176	77	22	55	152	14×20×13		3.16×10^{-5}	5.9	36.26	850
	130	176	107	22	85	152	14×20×13		3.16×10^{-5}	7.53	36.26	850
	130	176	137	22	115	152	14×20×13		3.16×10^{-5}	9.15	36.26	850
	143	204	127	28	99	172	18×26×17.5		3.16×10^{-5}	12.68	35.81	840
	143	204	187	28	159	172	18×26×17.5		3.16×10^{-5}	17.12	35.81	840
	143	204	247	28	219	172	18×26×17.5		3.16×10^{-5}	21.56	35.81	840
	170	243	131	32	99	205	22×32×21.5		7.71×10^{-5}	18.28	57.13	680
	170	243	191	32	159	205	22×32×21.5		7.71×10^{-5}	24.2	57.13	680
	170	243	251	32	219	205	22×32×21.5		7.71×10^{-5}	30.12	57.13	680

Note)The overall length of the nut will increase when equipping the QZ lubricating device. See A15-344 for further details.

Options⇒A15-333

DK
No Preload

DN value	70000

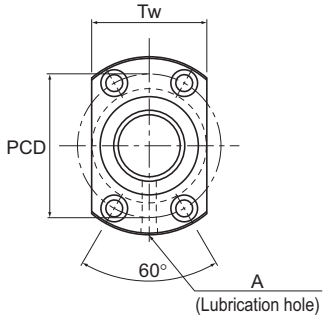

Model No.	Screw shaft outer diameter	Lead	Ball center-to-center diameter	Thread minor diameter	No. of loaded circuits	Basic load rating		Rigidity
						Ca	C_0a	K
	d	Ph	dp	dc	Rows × turns	kN	kN	N/μm
DK 1404-4	14	4	14.5	11.8	4×1	5.4	10.2	180
DK 1404-6	14	4	14.5	11.8	6×1	7.7	15.4	270
DK 1605-3	16	5	16.75	13.1	3×1	7.4	13	160
DK 1605-4	16	5	16.75	13.1	4×1	9.5	17.4	210
DK 2004-3	20	4	20.5	17.8	3×1	5.2	11.6	190
DK 2004-4	20	4	20.5	17.8	4×1	6.6	15.5	250
DK 2005-3	20	5	20.75	17.1	3×1	8.5	17.3	200
DK 2005-4	20	5	20.75	17.1	4×1	11	23.1	260
DK 2006-3	20	6	21	16.4	3×1	11.4	21.5	410
DK 2006-4	20	6	21	16.4	4×1	14.6	28.6	540
DK 2008-4	20	8	21	16.4	4×1	14.6	28.8	270

Download data by searching for the corresponding model number on the Technical Support site. https://tech.thk.com

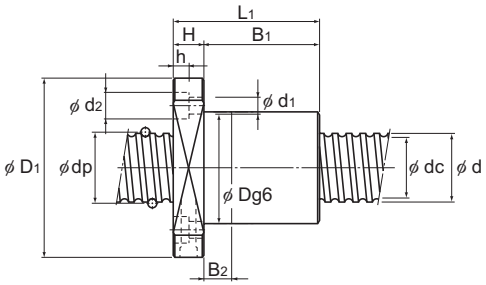

Unit: mm

	Nut dimensions										Screw shaft inertial moment/mm	Nut mass	Shaft mass	Permissible rotational speed
	Outer diameter D	Flange diameter D_1	Overall length L_1	H	B_1	B_2	PCD	$d_1 \times d_2 \times h$	Tw	Lubrication hole A	$kg \cdot m^2/mm$	kg	kg/m	min^{-1}
	26	45	48	10	38	10	35	4.5×8×4.5	29	M6	2.96×10^{-8}	0.2	1	4820
	26	45	60	10	50	10	35	4.5×8×4.5	29	M6	2.96×10^{-8}	0.23	1	4820
	30	49	45	10	35	10	39	4.5×8×4.5	31	M6	5.05×10^{-8}	0.24	1.25	4170
	30	49	50	10	40	10	39	4.5×8×4.5	31	M6	5.05×10^{-8}	0.26	1.25	4170
	32	56	42	11	31	10	44	5.5×9.5×5.5	35	M6	1.23×10^{-7}	0.26	2.18	3410
	32	56	46	11	35	10	44	5.5×9.5×5.5	35	M6	1.23×10^{-7}	0.27	2.18	3410
	34	58	46	11	35	10	46	5.5×9.5×5.5	36	M6	1.23×10^{-7}	0.31	2.06	3370
	34	58	51	11	40	10	46	5.5×9.5×5.5	36	M6	1.23×10^{-7}	0.34	2.06	3370
	35	58	52	11	41	10	46	5.5×9.5×5.5	36	M6	1.23×10^{-7}	0.36	1.93	3330
	35	58	59	11	48	10	46	5.5×9.5×5.5	36	M6	1.23×10^{-7}	0.39	1.93	3330
	35	58	69	11	58	15	46	5.5×9.5×5.5	36	M6	1.23×10^{-7}	0.45	2.06	3330

Note)The overall length of the nut will increase when equipping the QZ lubricating device. See A15-344 for further details.

DK
No Preload

DN value	70000

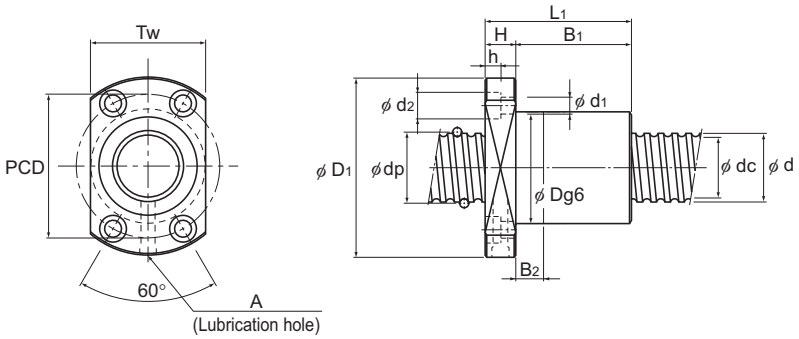

DK2504 to 2510

Model No.	Screw shaft outer diameter	Lead	Ball center-to-center diameter	Thread minor diameter	No. of loaded circuits	Basic load rating		Rigidity
						Ca	C₀a	K
	d	Ph	dp	dc	Rows × turns	kN	kN	N/μm
DK 2504-3	25	4	25.5	22.8	3×1	5.7	15	230
DK 2504-4	25	4	25.5	22.8	4×1	7.4	19.9	310
DK 2505-3	25	5	25.75	22.1	3×1	9.7	22.6	250
DK 2505-4	25	5	25.75	22.1	4×1	12.4	30.3	320
DK 2506-3	25	6	26	21.4	3×1	12.8	27	250
DK 2506-4	25	6	26	21.4	4×1	16.8	37.4	330
DK 2508-3	25	8	26	21.4	3×1	13.1	28.1	500
DK 2508-4	25	8	26	21.4	4×1	16.8	37.5	330
DK 2510-3	25	10	26	21.6	3×1	12.7	27	250
DK 2510-4	25	10	26	21.6	4×1	16.7	37.6	330
DK 2805-3	28	5	28.75	25.2	3×1	10.5	26.4	270
DK 2805-4	28	5	28.75	25.2	4×1	13.4	35.2	360
DK 2806-3	28	6	29	24.4	3×1	14	32	280
DK 2806-4	28	6	29	24.4	4×1	18	42.5	370
DK 2810-4	28	10	29.25	23.6	4×1	22.4	50	370

Download data by searching for the corresponding model number on the Technical Support site. https://tech.thk.com

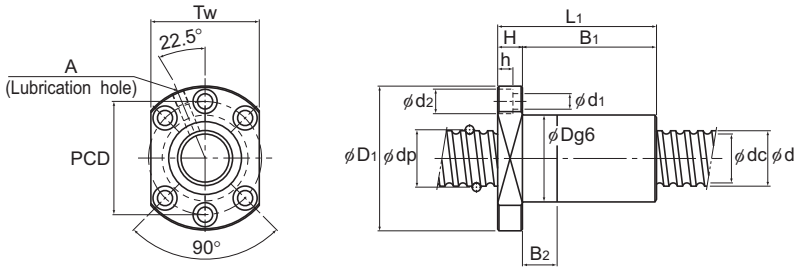

DK2805 to 2810

Unit: mm

	Nut dimensions										Screw shaft inertial moment/mm	Nut mass	Shaft mass	Permissible rotational speed
	Outer diameter	Flange diameter	Overall length							Lubrication hole				
	D	D_1	L_1	H	B_1	B_2	PCD	$d_1 \times d_2 \times h$	Tw	A	kg·m²/mm	kg	kg/m	min⁻¹
	38	63	43	11	32	10	51	5.5×9.5×5.5	39	M6	3.01×10^{-7}	0.33	3.5	2740
	38	63	47	11	36	10	51	5.5×9.5×5.5	39	M6	3.01×10^{-7}	0.35	3.5	2740
	40	63	46	11	35	10	51	5.5×9.5×5.5	41	M6	3.01×10^{-7}	0.38	3.35	2710
	40	63	51	11	40	10	51	5.5×9.5×5.5	41	M6	3.01×10^{-7}	0.41	3.35	2710
	40	63	52	11	41	10	51	5.5×9.5×5.5	41	M6	3.01×10^{-7}	0.41	3.19	2690
	40	63	60	11	49	10	51	5.5×9.5×5.5	41	M6	3.01×10^{-7}	0.46	3.19	2690
	40	63	62	12	50	10	51	5.5×9.5×5.5	41	M6	3.01×10^{-7}	0.48	3.35	2690
	40	63	71	12	59	15	51	5.5×9.5×5.5	41	M6	3.01×10^{-7}	0.54	3.35	2690
	40	63	80	15	65	15	51	5.5×9.5×5.5	41	M6	3.01×10^{-7}	0.62	3.45	2690
	40	63	85	15	70	20	51	5.5×9.5×5.5	41	M6	3.01×10^{-7}	0.65	3.45	2690
	43	71	49	12	37	10	57	6.6×11×6.5	55	M6	4.74×10^{-7}	0.48	4.27	2430
	43	71	54	12	42	10	57	6.6×11×6.5	55	M6	4.74×10^{-7}	0.51	4.27	2430
	43	71	53	12	41	10	57	6.6×11×6.5	55	M6	4.74×10^{-7}	0.5	4.36	2410
	43	71	61	12	49	10	57	6.6×11×6.5	55	M6	4.74×10^{-7}	0.56	4.36	2410
	45	71	84	15	69	20	57	6.6×11×6.5	55	M6	4.74×10^{-7}	0.82	4.18	2390

Note)The overall length of the nut will increase when equipping the QZ lubricating device. See A15-344 for further details.

Options⇒A15-333

DK
No Preload

DN value	70000

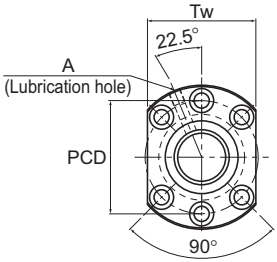

Model No.	Screw shaft outer diameter	Lead	Ball center-to-center diameter	Thread minor diameter	No. of loaded circuits	Basic load rating		Rigidity
						Ca	C_0a	K
	d	Ph	dp	dc	Rows × turns	kN	kN	N/μm
DK 3204-3	32	4	32.5	30.1	3×1	6.4	19.6	290
DK 3204-4	32	4	32.5	30.1	4×1	8.2	26.1	380
DK 3205-3	32	5	32.75	29.2	3×1	11.1	30.2	300
DK 3205-4	32	5	32.75	29.2	4×1	14.2	40.3	400
DK 3205-6	32	5	32.75	29.2	6×1	20.1	60.4	600
DK 3206-3	32	6	33	28.4	3×1	14.9	37.1	310
DK 3206-4	32	6	33	28.4	4×1	19.1	49.5	410
DK 3210-3	32	10	33.75	26.4	3×1	25.7	52.2	300
DK 3210-4	32	10	33.75	26.4	4×1	33	69.7	390
DK 3212-4	32	12	33.75	26.4	4×1	34.2	73.9	420
DK 3610-3	36	10	37.75	30.5	3×1	28.8	63.8	350
DK 3610-4	36	10	37.75	30.5	4×1	36.8	85	470
DK 4010-3	40	10	41.75	34.4	3×1	29.8	69.3	380
DK 4010-4	40	10	41.75	34.4	4×1	38.1	92.4	500
DK 4012-3	40	12	41.75	34.4	3×1	30.6	72.3	390
DK 4012-4	40	12	41.75	34.4	4×1	39.2	96.4	520
DK 4016-4	40	16	41.75	34.4	4×1	39.1	96.8	520
DK 4020-3	40	20	41.75	34.7	3×1	29.4	69.3	750

Download data by searching for the corresponding model number on the Technical Support site. https://tech.thk.com

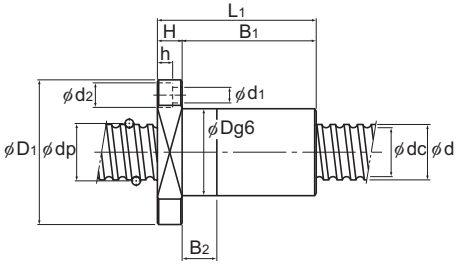

Unit: mm

	Nut dimensions										Screw shaft inertial moment/mm	Nut mass	Shaft mass	Permissible rotational speed
	Outer diameter	Flange diameter	Overall length							Lubrication hole				
	D	D_1	L_1	H	B_1	B_2	PCD	$d_1 \times d_2 \times h$	Tw	A	kg·m²/mm	kg	kg/m	min^{-1}
	45	76	44	11	33	10	63	6.6×11×6.5	59	M6	8.08×10^{-7}	0.44	5.86	2150
	45	76	48	11	37	10	63	6.6×11×6.5	59	M6	8.08×10^{-7}	0.47	5.86	2150
	46	76	47	12	35	10	63	6.6×11×6.5	59	M6	8.08×10^{-7}	0.5	5.67	2130
	46	76	52	12	40	10	63	6.6×11×6.5	59	M6	8.08×10^{-7}	0.53	5.67	2130
	46	76	62	12	50	10	63	6.6×11×6.5	59	M6	8.08×10^{-7}	0.6	5.67	2130
	48	76	53	12	41	10	63	6.6×11×6.5	59	M6	8.08×10^{-7}	0.58	6.31	2120
	48	76	61	12	49	10	63	6.6×11×6.5	59	M6	8.08×10^{-7}	0.65	6.31	2120
	54	87	80	15	65	15	69	9×14×8.5	66	M6	8.08×10^{-7}	1.22	4.98	2070
	54	87	90	15	75	20	69	9×14×8.5	66	M6	8.08×10^{-7}	1.34	4.98	2070
	54	87	98	15	83	25	69	9×14×8.5	66	M6	8.08×10^{-7}	1.43	5.2	2070
	58	98	82	18	64	15	77	11×17.5×11	75	M6	1.29×10^{-6}	1.52	6.51	1850
	58	98	93	18	75	20	77	11×17.5×11	75	M6	1.29×10^{-6}	1.66	6.51	1850
	62	104	83	18	65	15	82	11×17.5×11	79	Rc1/8 (PT1/8)	1.97×10^{-6}	3.14	8.22	1670
	62	104	93	18	75	20	82	11×17.5×11	79		1.97×10^{-6}	3.41	8.22	1670
	62	104	90	18	72	20	82	11×17.5×11	79		1.97×10^{-6}	1.77	8.5	1670
	62	104	103	18	85	25	82	11×17.5×11	79		1.97×10^{-6}	1.95	8.5	1670
	62	104	120	18	102	30	82	11×17.5×11	79		1.97×10^{-6}	2.19	8.83	1670
	62	104	123	18	105	30	82	11×17.5×11	79		1.97×10^{-6}	2.23	9.03	1670

Note)The overall length of the nut will increase when equipping the QZ lubricating device. See A15-344 for further details.

Options⇒A15-333

DK
No Preload

DN value	70000

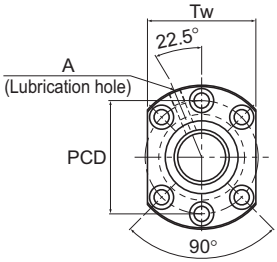

Model No.	Screw shaft outer diameter d	Lead Ph	Ball center-to-center diameter dp	Thread minor diameter dc	No. of loaded circuits Rows × turns	Basic load rating Ca kN	Basic load rating C₀a kN	Rigidity K N/μm
DK 5010-3	50	10	51.75	44.4	3×1	33.9	90.7	470
DK 5010-4	50	10	51.75	44.4	4×1	43.4	120.5	610
DK 5010-6	50	10	51.75	44.4	6×1	62.7	186.8	930
DK 5012-3	50	12	52.25	43.3	3×1	45.8	113	490
DK 5012-4	50	12	52.25	43.3	4×1	58.6	150.6	640
DK 5016-3	50	16	52.25	43.3	3×1	45.7	113.3	490
DK 5016-4	50	16	52.25	43.3	4×1	58.5	151	640
DK 5020-3	50	20	52.25	43.6	3×1	44.2	108.8	470
DK 6310-4	63	10	64.75	57.7	4×1	49.5	160.7	780
DK 6310-6	63	10	64.75	57.7	6×1	70.3	242.1	1140
DK 6312-3	63	12	65.25	56.3	3×1	51.9	147.4	600
DK 6312-4	63	12	65.25	56.3	4×1	66.4	196.6	785
DK 6320-3	63	20	65.7	55.9	3×1	83.5	229.3	1470

Download data by searching for the corresponding model number on the Technical Support site. https://tech.thk.com

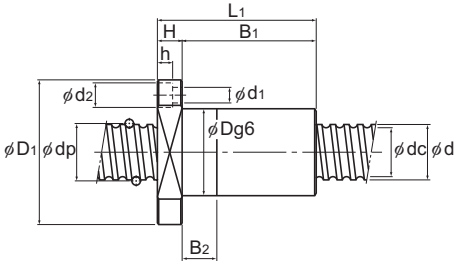

Unit: mm

	Nut dimensions										Screw shaft inertial moment/mm	Nut mass	Shaft mass	Permissible rotational speed
	Outer diameter	Flange diameter	Overall length							Lubrication hole				
	D	D_1	L_1	H	B_1	B_2	PCD	$d_1 \times d_2 \times h$	Tw	A	$kg \cdot m^2/mm$	kg	kg/m	min^{-1}
	72	123	83	18	65	15	101	11×17.5×11	92	Rc1/8 (PT1/8)	4.82×10^{-6}	2.14	13.38	1350
	72	123	93	18	75	20	101	11×17.5×11	92		4.82×10^{-6}	2.3	13.38	1350
	72	123	114	18	96	30	101	11×17.5×11	92		4.82×10^{-6}	2.65	13.38	1350
	75	129	97	22	75	20	105	14×20×13	98		4.82×10^{-6}	2.91	12.74	1330
	75	129	110	22	88	25	105	14×20×13	98		4.82×10^{-6}	3.16	12.74	1330
	75	129	111	22	89	25	105	14×20×13	98		4.82×10^{-6}	3.18	13.41	1330
	75	129	129	22	107	30	105	14×20×13	98		4.82×10^{-6}	3.52	13.41	1330
	75	129	136	28	108	30	105	14×20×13	98		4.82×10^{-6}	3.94	13.8	1330
	85	146	97	22	75	20	122	14×20×13	110		1.21×10^{-5}	3.28	21.93	1080
	85	146	118	22	96	30	122	14×20×13	110		1.21×10^{-5}	3.7	21.93	1080
	90	146	98	22	76	20	122	14×20×13	110		1.21×10^{-5}	3.71	21.14	1070
	90	146	111	22	89	25	122	14×20×13	110		1.21×10^{-5}	4.04	21.14	1070
	95	159	136	28	108	30	129	18×26×17.5	121		1.21×10^{-5}	6.17	21.57	1060

Note)The overall length of the nut will increase when equipping the QZ lubricating device. See A15-344 for further details.

Options⇒A15-333

WHF
No Preload

DN value	120000

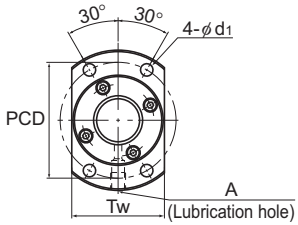

WHF1530/1540/2020/2025/
2030/2040/2550

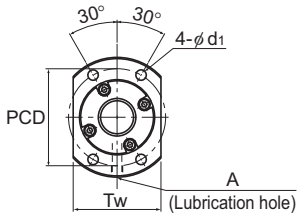

WHF2525

Model No.	Screw shaft outer diameter	Lead	Ball center-to-center diameter	Thread minor diameter	No. of loaded circuits	Basic load rating		Rigidity	Nut dimensions			
						Ca	C_0a	K	Outer diameter	Flange diameter	Overall length	
	d	Ph	dp	dc	Rows X turns	kN	kN	N/μm	D	D_1	L_1	
WHF 1530-3.4	15	30	15.75	12.5	2×1.7	8	14.4	195	32	53	64.5	
WHF 1540-3.4	15	40	15.75	12.5	2×1.7	7.7	16.3	209	34	57	81.6	
WHF 2020-3.4	20	20	20.75	17.5	2×1.7	9.6	21	225	42	64	47.1	
WHF 2025-3.4	20	25	20.75	17.6	2×1.7	9.8	22.3	236	39	62	56.2	
WHF 2030-3.4	20	30	20.75	17.6	2×1.7	9.9	23.5	243	39	62	65.3	
WHF 2040-3.4	20	40	20.75	17.5	2×1.7	9.6	20.3	256	37	57	82.7	
WHF 2525-3.4	25	25	26	21.9	2×1.7	14.5	33.1	285	50	77	58.8	
WHF 2550-3.4	25	50	26	21.9	2×1.7	14.4	31.9	323	45	69	103.3	

Download data by searching for the corresponding model number on the Technical Support site. https://tech.thk.com

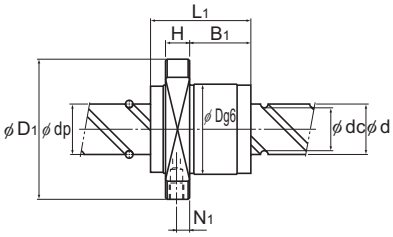

Unit: mm

	Nut dimensions							Screw shaft inertial moment/mm	Nut mass	Shaft mass	Permissible rotational speed
	H	B_1	PCD	d_1	Tw	N_1	Lubrication hole A	$kg \cdot m^2/mm$	kg	kg/m	min^{-1}
	10	47.5	43	5.5	33	5	M6	3.9×10^{-8}	0.38	1.26	5000
	10	64.6	45	5.5	40	5	M6	3.9×10^{-8}	0.48	1.28	5000
	10	24.1	53	5.5	46	5	M6	1.23×10^{-7}	0.49	2.25	5000
	10	33.2	50	5.5	46	5	M6	1.23×10^{-7}	0.51	2.26	5000
	10	43.3	50	5.5	46	5	M6	1.23×10^{-7}	0.55	2.28	5000
	10	65.7	47	5.5	38	5	M6	1.23×10^{-7}	0.58	2.34	5000
	12	31.3	63	6.6	56	6	M6	3.01×10^{-7}	0.65	3.52	4610
	12	79.3	57	6.6	46	6	M6	3.01×10^{-7}	0.72	3.66	4610

Note) The Model WHF can be equipped with a brush seal depending on the model number. Contact THK if you would like to use one.
The overall length of the nut will increase when equipping the QZ lubricating device. See A15-344 for further details.

Options⇒A15-333

BLK (Precision Ball Screw) No Preload

DN value	70000

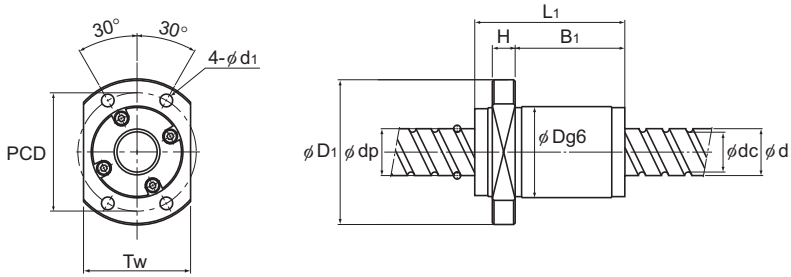

BLK0808

Model No.	Screw shaft outer diameter	Lead	Ball center-to-center diameter	Thread minor diameter	No. of loaded circuits	Basic load rating		Rigidity
						Ca	C₀a	K
	d	Ph	dp	dc	Rows × turns	kN	kN	N/μm
BLK 0808-3.2	8	8	8.4	6.7	2×1.6	2.2	3.8	95
BLK 1510-5.6	15	10	15.75	12.5	2×2.8	14.3	27.8	340
BLK 1616-2.8	16	16	16.65	13.7	1×2.8	5.2	9.9	180
BLK 1616-3.6	16	16	16.65	13.7	2×1.8	7.1	14.3	220
BLK 2020-2.8	20	20	20.75	17.5	1×2.8	8.1	17.2	230
BLK 2020-3.6	20	20	20.75	17.5	2×1.8	11.1	24.7	290
BLK 2525-2.8	25	25	26	21.9	1×2.8	12.2	26.9	270
BLK 2525-3.6	25	25	26	21.9	2×1.8	16.6	38.7	350
BLK 3232-2.8	32	32	33.25	28.3	1×2.8	17.3	41.4	340
BLK 3232-3.6	32	32	33.25	28.3	2×1.8	23.7	59.5	440
BLK 3620-5.6	36	20	37.75	31.2	2×2.8	54.9	134.3	760
BLK 3624-5.6	36	24	38	30.7	2×2.8	63.8	151.9	770
BLK 3636-2.8	36	36	37.4	31.7	1×2.8	22.4	54.1	390
BLK 3636-3.6	36	36	37.4	31.7	2×1.8	30.8	78	490
BLK 4040-2.8	40	40	41.75	35.2	1×2.8	28.2	68.9	430
BLK 4040-3.6	40	40	41.75	35.2	2×1.8	38.7	99.2	550
BLK 5050-2.8	50	50	52.2	44.1	1×2.8	42.2	107.8	530
BLK 5050-3.6	50	50	52.2	44.1	2×1.8	57.8	155	670

Download data by searching for the corresponding model number on the Technical Support site. https://tech.thk.com

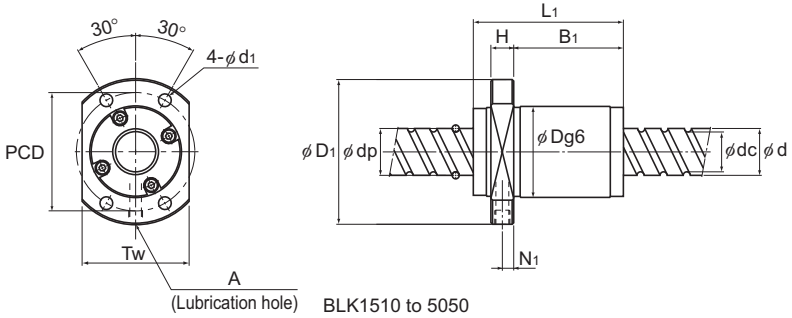

BLK1510 to 5050

Unit: mm

	Nut dimensions										Screw shaft inertial moment/mm	Nut mass	Shaft mass	Permissible rotational speed
	Outer diameter D	Flange diameter D_1	Overall length L_1	H	B_1	PCD	d_1	Tw	N_1	Lubrication hole A	$kg \cdot m^2/mm$	kg	kg/m	min^{-1}
	18	31	20	4	10	25	3.4	20	—	—	3.16×10^{-9}	0.03	0.36	3500
	34	57	44	10	24	45	5.5	40	5	M6	3.9×10^{-8}	0.34	0.31	4440
	32	53	54	10	37.5	42	4.5	38	5	M6	5.05×10^{-8}	0.32	1.41	4200
	32	53	38	10	21.5	42	4.5	38	5	M6	5.05×10^{-8}	0.21	1.41	4200
	39	62	65	10	47.5	50	5.5	46	5	M6	1.23×10^{-7}	0.49	2.25	3370
	39	62	45	10	27.5	50	5.5	46	5	M6	1.23×10^{-7}	0.35	2.25	3370
	47	74	80	12	60	60	6.6	56	6	M6	3.01×10^{-7}	0.89	3.52	2690
	47	74	55	12	35	60	6.6	56	6	M6	3.01×10^{-7}	0.64	3.52	2690
	58	92	102	15	77	74	9	68	7.5	M6	8.08×10^{-7}	1.78	5.83	2100
	58	92	70	15	45	74	9	68	7.5	M6	8.08×10^{-7}	1.32	5.83	2100
	70	110	78	17	45	90	11	80	8.5	M6	1.29×10^{-6}	2.23	6.49	1850
	75	115	94	18	59	94	11	86	9	M6	1.29×10^{-6}	3.05	6.39	1840
	66	106	113	17	86	85	11	76	8.5	M6	1.29×10^{-6}	2.61	7.34	1870
	66	106	77	17	50	85	11	76	8.5	M6	1.29×10^{-6}	1.93	7.34	1870
	73	114	125	17	96.5	93	11	84	8.5	M6	1.97×10^{-6}	3.4	9.01	1670
	73	114	85	17	56.5	93	11	84	8.5	M6	1.97×10^{-6}	2.48	9.01	1670
	90	135	156	20	122	112	14	104	10	M6	4.82×10^{-6}	6.18	14.08	1340
	90	135	106	20	72	112	14	104	10	M6	4.82×10^{-6}	4.45	14.08	1340

Note) The Model BLK can be equipped with a brush seal depending on the model number. Contact THK if you would like to use one.
The overall length of the nut will increase when equipping the QZ lubricating device. See A15-344 for further details.

Options⇒A15-333

WGF
No Preload

DN value	70000

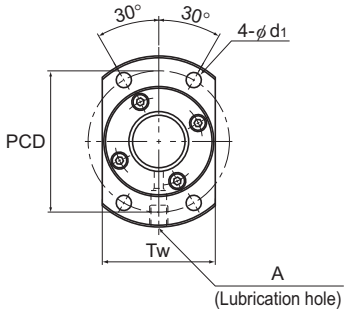

Model No.	Screw shaft outer diameter	Lead	Ball center-to-center diameter	Thread minor diameter	No. of loaded circuits	Basic load rating		Rigidity
						Ca	C_0a	K
	d	Ph	dp	dc	Rows × turns	kN	kN	N/μm
WGF 0812-3	8	12	8.4	6.6	2×1.65	2.2	3.9	110
WGF 1015-3	10	15	10.5	8.3	2×1.65	3.3	6.2	140
WGF 1320-3	13	20	13.5	10.8	2×1.65	4.7	9.6	180
WGF 1520-1.5	15	20	15.75	12.5	1×1.5	4.4	7.9	100
WGF 1520-3	15	20	15.75	12.5	2×1.5	8.1	15.8	190
WGF 1530-1	15	30	15.75	12.5	2×0.6	3.5	5.4	90
WGF 1530-3	15	30	15.75	12.5	2×1.6	8.1	14.6	220
WGF 1540-1.5	15	40	15.75	12.5	2×0.75	3.9	7.4	110
WGF 2040-1	20	40	20.75	17.5	2×0.65	4.3	8	110
WGF 2040-3	20	40	20.75	17.5	2×1.65	9.5	20.2	280
WGF 2060-1.5	20	60	20.75	17.5	2×0.75	4.5	11	140
WGF 2550-1	25	50	26	21.9	2×0.65	6.4	12.5	140
WGF 2550-3	25	50	26	21.9	2×1.65	14.3	31.7	340
WGF 3060-1	30	60	31.25	26.4	2×0.65	8.9	18	170
WGF 3060-3	30	60	31.25	26.4	2×1.65	19.9	45.7	410
WGF 3090-1.5	30	90	31.25	26.4	2×0.75	9.8	25.8	200
WGF 4080-1	40	80	41.75	35.2	2×0.65	15	32.1	220
WGF 4080-3	40	80	41.75	35.2	2×1.65	33.4	81.4	530
WGF 50100-1	50	100	52.2	44.1	2×0.65	22.4	50.1	270
WGF 50100-3	50	100	52.2	44.1	2×1.65	49.9	127.2	650

Download data by searching for the corresponding model number on the Technical Support site. https://tech.thk.com

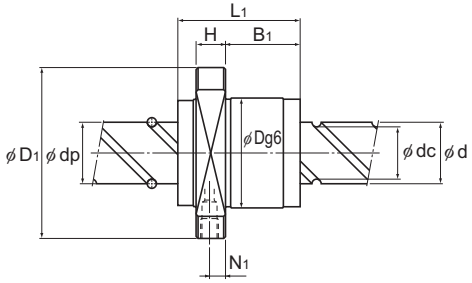

Unit: mm

	Nut dimensions										Screw shaft inertial moment/mm	Nut mass	Shaft mass	Permissible rotational speed
	Outer diameter	Flange diameter	Overall length							Lubrication hole				
	D	D_1	L_1	H	B_1	PCD	d_1	Tw	N_1	A	$kg \cdot m^2/mm$	kg	kg/m	min^{-1}
	18	31	27	4	17	25	3.4	20	—	—	3.16×10^{-9}	0.054	0.35	3500
	23	40	33	5	22	32	4.5	25	—	—	7.71×10^{-9}	0.11	0.55	3500
	28	45	43	5	29	37	4.5	30	—	—	2.2×10^{-8}	0.18	0.96	3500
	32	53	45	10	28	43	5.5	33	5	M6	3.9×10^{-8}	0.29	1.22	4440
	32	53	45	10	28	43	5.5	33	5	M6	3.9×10^{-8}	0.29	1.22	4440
	32	53	33	10	17	43	5.5	33	5	M6	3.9×10^{-8}	0.23	1.26	4440
	32	53	63	10	47	43	5.5	33	5	M6	3.9×10^{-8}	0.38	1.26	4440
	32	53	42	10	26.3	43	5.5	33	5	M6	3.9×10^{-8}	0.28	1.28	4440
	37	57	41	10	25	47	5.5	38	5.5	M6	1.23×10^{-7}	0.24	2.34	3370
	37	57	81	10	65	47	5.5	38	5.5	M6	1.23×10^{-7}	0.48	2.34	3370
	37	57	60	10	40.1	47	5.5	38	5.5	M6	1.23×10^{-7}	0.4	2.37	3370
	45	69	52	12	31.5	57	6.6	46	7	M6	3.01×10^{-7}	0.43	3.66	2690
	45	69	102	12	81.5	57	6.6	46	7	M6	3.01×10^{-7}	0.85	3.66	2690
	55	89	62	15	37	71	9	56	9	M6	6.24×10^{-7}	1.11	5.28	2240
	55	89	122	15	97	71	9	56	9	M6	6.24×10^{-7}	1.9	5.28	2240
	55	89	92	15	61.3	71	9	56	9	M6	6.24×10^{-7}	1.51	5.34	2240
	73	114	79	17	50.5	93	11	74	9	M6	1.97×10^{-6}	2.34	9.38	1670
	73	114	159	17	130.5	93	11	74	9	M6	1.97×10^{-6}	4.18	9.38	1670
	90	135	98	20	64	112	14	92	10	M6	4.82×10^{-6}	4.18	14.66	1340
	90	135	198	20	164	112	14	92	10	M6	4.82×10^{-6}	7.63	14.66	1340

Note) The Model WGF can be equipped with a brush seal depending on the model number. Contact THK if you would like to use one.
The overall length of the nut will increase when equipping the QZ lubricating device. See A15-344 for further details.

Options⇒A15-333

BNT
No Preload

DN value	70000

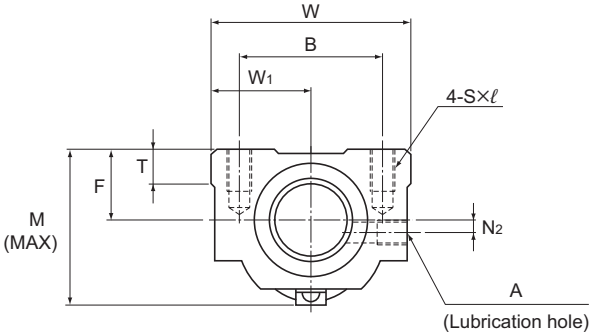

Model No.	Screw shaft outer diameter	Lead	Ball center-to-center diameter	Thread minor diameter	No. of loaded circuits	Basic load rating		Rigidity
						Ca	C₀a	K
	d	Ph	dp	dc	Rows × turns	kN	kN	N/μm
BNT 1404-3.6	14	4	14.4	11.5	1×3.65	6.8	12.6	190
BNT 1405-2.6	14	5	14.5	11.2	1×2.65	7.2	12.6	150
BNT 1605-2.6	16	5	16.75	13.5	1×2.65	7.8	14.7	170
BNT 1808-3.6	18	8	19.3	14.4	1×3.65	18.2	34.4	270
BNT 2005-2.6	20	5	20.5	17.2	1×2.65	8.7	18.3	200
BNT 2010-2.6	20	10	21.25	16.4	1×2.65	14.7	27.8	220
BNT 2505-2.6	25	5	25.5	22.2	1×2.65	9.6	23	240
BNT 2510-5.3	25	10	26.8	20.2	2×2.65	43.4	92.8	520
BNT 2806-2.6	28	6	28.5	25.2	1×2.65	10.1	25.8	270
BNT 2806-5.3	28	6	28.5	25.2	2×2.65	18.3	51.6	510
BNT 3210-2.6	32	10	33.75	27.2	1×2.65	27.3	59.5	330
BNT 3210-5.3	32	10	33.75	27.2	2×2.65	49.6	118.9	640
BNT 3610-2.6	36	10	37	30.5	1×2.65	28.7	65.6	360
BNT 3610-5.3	36	10	37	30.5	2×2.65	52.1	131.2	700
BNT 4512-5.3	45	12	46.5	39.2	2×2.65	68.1	186.7	860

Download data by searching for the corresponding model number on the Technical Support site. https://tech.thk.com

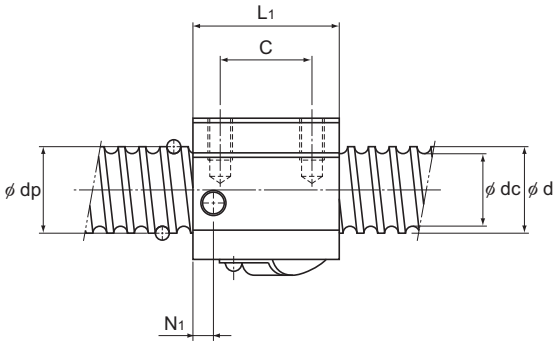

Unit: mm

	Nut dimensions												Screw shaft inertial moment/mm	Nut mass	Shaft mass	Permis-sible rotational speed
	Width	Center height	Overall length	Mounting hole								Lubrication hole				
	W	F	L_1	B	C	S×ℓ	W_1	T	M	N_1	N_2	A	kg·m²/mm	kg	kg/m	min^{-1}
	34	13	35	26	22	M4×7	17	6	30	6	2	M6	2.96×10^{-8}	0.15	0.93	4860
	34	13	35	26	22	M4×7	17	6	31	6	2	M6	2.96×10^{-8}	0.15	0.92	4820
	42	16	36	32	22	M5×8	21	21.5	32.5	6	2	M6	5.05×10^{-8}	0.3	1.24	4170
	48	17	56	35	35	M6×10	24	10	44	8	3	M6	8.09×10^{-8}	0.47	1.46	3620
	48	17	35	35	22	M6×10	24	9	39	5	3	M6	1.23×10^{-7}	0.28	2.06	3410
	48	18	58	35	35	M6×10	24	9	46	10	2	M6	1.23×10^{-7}	0.5	1.99	3290
	60	20	35	40	22	M8×12	30	9.5	45	7	5	M6	3.01×10^{-7}	0.41	3.35	2740
	60	23	94	40	60	M8×12	30	10	55	10	—	M6	3.01×10^{-7}	1.18	2.79	2610
	60	22	42	40	18	M8×12	30	10	50	8	—	M6	4.74×10^{-7}	0.81	4.42	2450
	60	22	67	40	40	M8×12	30	10	50	8	—	M6	4.74×10^{-7}	0.78	4.42	2450
	70	26	64	50	45	M8×12	35	12	62	10	—	M6	8.08×10^{-7}	1.3	4.98	2070
	70	26	94	50	60	M8×12	35	12	62	10	—	M6	8.08×10^{-7}	2	4.98	2070
	86	29	64	60	45	M10×16	43	17	67	11	—	M6	1.29×10^{-6}	1.8	6.54	1890
	86	29	96	60	60	M10×16	43	17	67	11	—	M6	1.29×10^{-6}	2.4	6.54	1890
	100	36	115	75	75	M12×20	50	20.5	80	13	—	M6	3.16×10^{-6}	4.1	10.56	1500

Note) The Model BNT can be equipped with a brush seal depending on the model number. Contact THK if you would like to use one.
The overall length of the nut will increase when equipping the QZ lubricating device. See **A15-344** for further details.

Options⇒A15-333