Rolled Ball Screw

Models JPF, BTK-V, MTF, WHF, BLK/WTF, CNF and BNT

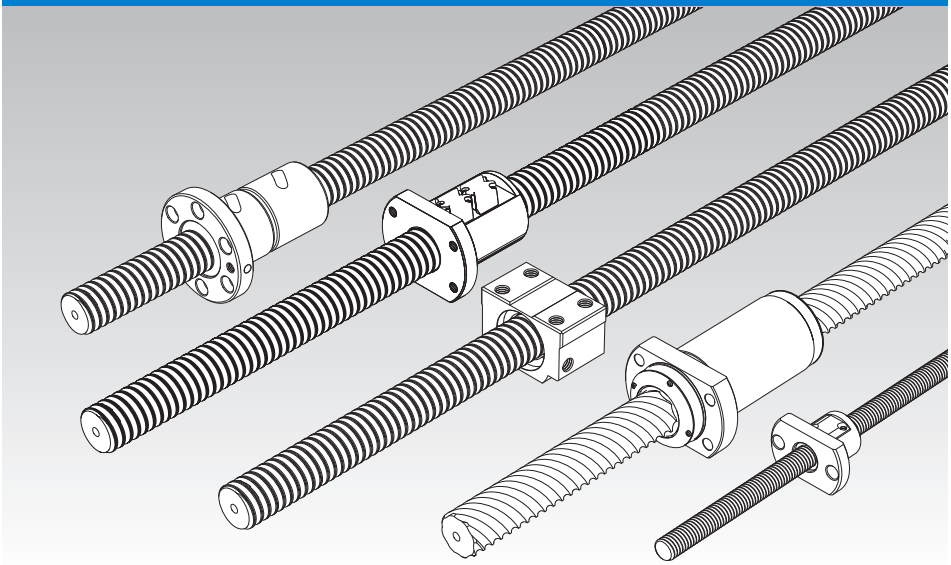

Structure and Features

THK Rolled Ball Screws are low priced feed screws that use a screw shaft rolled with high accuracy and specially surface-ground, instead of a thread-ground shaft used in the Precision Ball Screws.
The ball raceways of the ball screw nut are all thread-ground, thus to achieve a smaller axial clearance and smoother motion than the conventional rolled ball screw.
In addition, a wide array of types are offered as standard in order to allow optimal products to be selected according to the application.

[Achieves Lead Angle Accuracy of Class C7]

Screw shafts with travel distance error of classes C7 and C8 are also manufactured as the standard in addition to class C10 to meet a broad range of applications.

Travel distance	C7	: ±0.05/300 (mm)
	C8	: ±0.10/300 (mm)
	C10	: ±0.21/300 (mm)

(For maximum length of screw shaft by accuracy grade, see A15-25.)

[Achieves Roughness of the Ball Raceways of the Screw Shaft at 0.20 a or Less]

The surface of the screw shaft's ball raceways is specially ground after the shaft is rolled to ensure surface roughness of 0.20 a or less, which is equal to that of the ground thread of the Precision Ball Screw.

[The Ball Raceways of the Ball Screw Nut are Finished by Grinding]

THK finishes the ball raceways of Rolled Ball Screw nuts by grinding, just as the Precision Ball Screws, to secure the durability and the smooth motion.

[Low Price]

The screw shaft is induction-hardened or carburized after being rolled, and its surface is then specially ground. This allows the rolled Ball Screw to be priced lower than the Precision Ball Screw with a ground thread.

[Effects of high levels of dustproofing]

The ball screw nut is incorporated with a compact labyrinth seal or a brush seal. This achieves low friction, high dust-prevention effect and a longer service life of the Ball Screw.

Types and Features

[Preload Type]

Model JPF

Specification Table⇒A15-270

This model achieves zero-backlash through a constant preloading method by shifting the phase, with the central part of the nut as a spring structure.
The constant preload method allows the ball screw to absorb a pitch error and achieve a smooth motion.

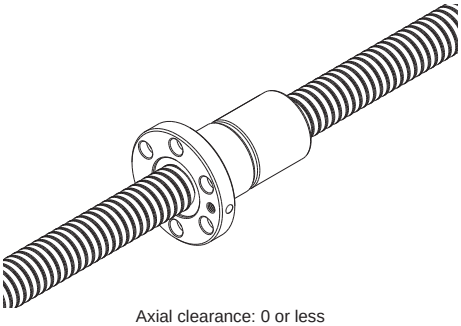

Axial clearance: 0 or less

● **Direction of applied load**

The direction of the applied load during use must be in the recommended loading direction indicated in the figure. If a load is applied in the opposite direction, it may cause the spring structure to fracture, and therefore, the applied load must be 0.1 × Ca or less during use.

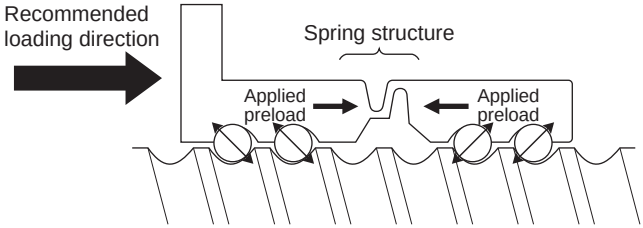

[No Preload Type]

Model BTK-V

Specification Table⇒A15-272

This Rolled Ball Screw feed achieves a DN value of 100,000 by using a new circulation structure.
Since the nut outer diameter and the mounting holes of this model are dimensionally interchangeable with the previous model BTK, model BTK can be replaced with this model.

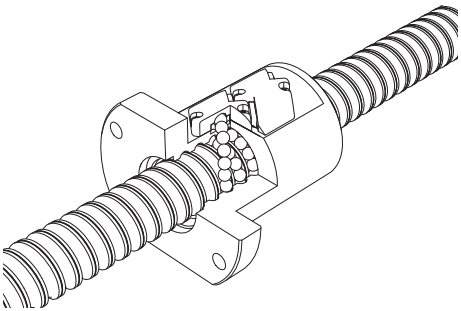

Model MTF

Specification Table⇒A15-274

A miniature type with a screw shaft diameter of ϕ6 to ϕ12 mm and a lead of 1 to 2 mm.

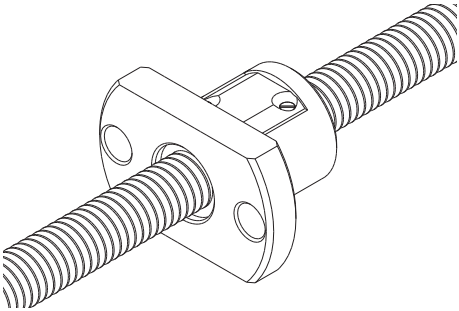

Model WHF

Specification Table⇒A15-275

This Ball Screw for high-speed feed achieves a DN value of 100,000 by using a new circulation structure.
Since the nut outer diameter and the mounting holes of this model are dimensionally interchangeable with the previous model WTF, model WTF can be replaced with this model. (WHF1530, WHF2040 and WHF2550)

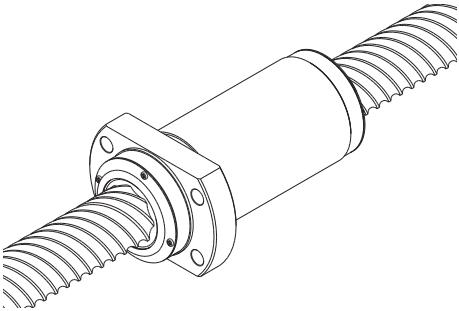

Models BLK/WTF

Specification Table⇒A15-276

Using an end-cap method, these models achieve stable motion in a high-speed rotation.

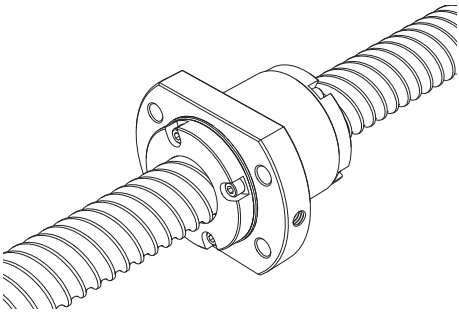

Model CNF

Specification Table⇒A15-282

With a combination of 4 rows of large-lead loaded grooves and a long nut, a long service life is achieved.

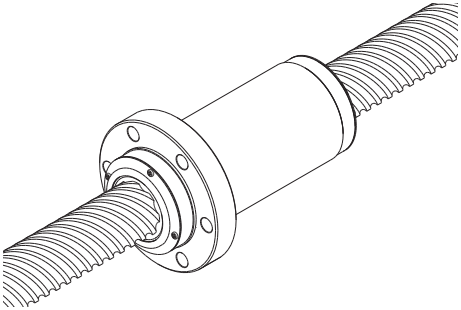

Square Ball Screw Nut Model BNT

Specification Table⇒A15-280

Since the mounting screw holes are machined on the square ball screw nut, this model can compactly be mounted on the machine without a housing.

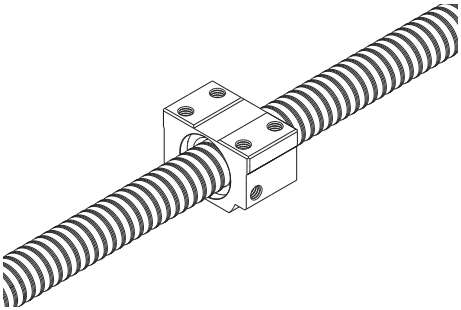

JPF
With Preload

DN value	50000

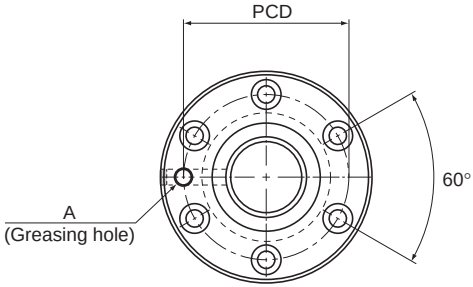

Model No.	Screw shaft outer diameter d	Lead Ph	Ball center-to-center diameter dp	Thread minor diameter dc	No. of loaded circuits Rows × turns	Basic load rating Ca kN	Basic load rating C_0a kN	Outer diameter D	Flange diameter D_1	Outer diameter D_2
JPF 1404-4	14	4	14.4	11.5	2×1	2.8	5.1	26	46	25.5
JPF 1405-4		5	14.5	11.2	2×1	3.9	8.6	26	46	25.5
JPF 1605-4	16	5	16.75	13.5	2×1	3.7	8.2	30	49	29.5
JPF 2005-6	20	5	20.5	17.2	3×1	6	16	34	57	33.5
JPF 2505-6	25	5	25.5	22.2	3×1	6.9	20.8	40	66	39.5
JPF 2510-4		10	26.8	20.2	2×1	11.4	24.5	47	72	46.5
JPF 2805-6	28	5	28.75	25.2	3×1	7.3	23.9	43	69	42.5
JPF 2806-6		6	28.5	25.2	3×1	7.3	23.9	43	69	42.5
JPF 3210-6	32	10	33.75	27.2	3×1	19.3	49.9	54	88	53.5
JPF 3610-6	36	10	37	30.5	3×1	20.6	56.2	58	98	57.5
JPF 4010-6	40	10	41.75	35.2	3×1	22.2	65.3	62	104	61.5

Model number coding

JPF1404-4 RR G0 +500L C7 T

- JPF1404-4: Model No.
- RR: Seal symbol (*1)
- G0: Symbol for clearance in the axial direction
- +500L: Overall screw shaft length (in mm)
- C7: Accuracy symbol (*2)
- T: Symbol for rolled shaft

(*1) See A15-336. (*2) See A15-12.

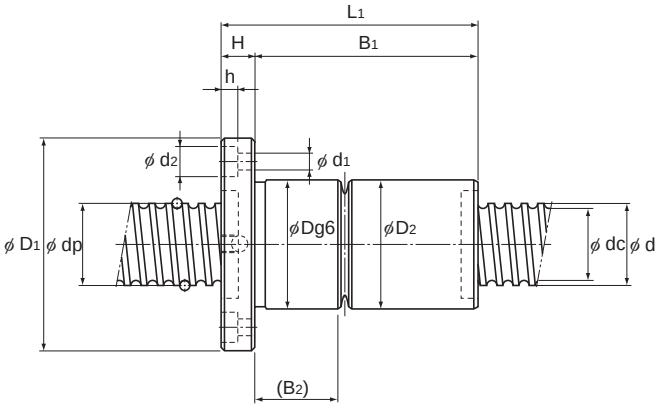

Unit: mm

Nut dimensions							Screw shaft inertial moment/mm	Nut mass	Shaft mass
Overall length L_1	H	B_1	B_2	PCD	$d_1 \times d_2 \times h$	Greasing hole A	kg-cm²/mm	kg	kg/m
52	10	42	16.5	36	4.5×8×4.5	M6	2.96×10^{-4}	0.22	1
60	10	50	20	36	4.5×8×4.5	M6	2.96×10^{-4}	0.24	0.99
60	10	50	19.5	39	4.5×8×4.5	M6	5.05×10^{-4}	0.3	1.34
80	11	69	26.5	45	5.5×9.5×5.5	M6	1.23×10^{-3}	0.46	2.15
80	11	69	26	51	5.5×9.5×5.5	M6	3.01×10^{-3}	0.6	3.45
112	12	100	42	58	6.6×11×6.5	M6	3.01×10^{-3}	1.2	3.26
80	12	68	25	55	6.6×11×6.5	M6	4.74×10^{-3}	0.66	4.27
90	12	78	35	55	6.6×11×6.5	M6	4.74×10^{-3}	0.72	4.44
135	15	120	53.5	70	9×14×8.5	M6	8.08×10^{-3}	1.84	5.49
138	18	120	53.5	77	11×17.5×11	M6	1.29×10^{-2}	2.22	6.91
138	18	120	53.5	82	11×17.5×11	R1/8 (PT1/8)	1.97×10^{-2}	2.42	8.81

Note) The ball screw nut and the screw shaft of model JPF are not sold separately.
The basic load rating corresponds to the recommended loading direction.
If a load is applied in the opposite direction, the value must be 0.1×Ca or less during use (see A15-266).

Options⇒A15-335

BTK-V
No Preload

DN value	100000

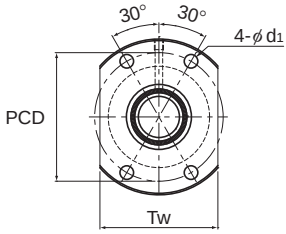

Model No.	Screw shaft outer diameter	Lead	Ball center-to-center diameter	Thread minor diameter	No. of loaded circuits	Basic load rating		Rigidity				
						Ca	C_0a	K	Outer diameter	Flange diameter	Overall length	
	d	Ph	dp	dc	Rows X turns	kN	kN	N/μm	D	D_1	L_1	H
BTK 1006V-2.6	10	6	10.5	7.8	1×2.65	2.8	4.9	88	26	42	36	8
BTK 1208V-2.6	12	8	12.65	9.7	1×2.65	3.8	6.8	108	29	45	44	8
BTK 1404V-3.6	14	4	14.4	11.5	1×3.65	5.5	11.5	150	31	50	40	10
BTK 1405V-2.6	14	5	14.5	11.2	1×2.65	5	11.4	116	32	50	40	10
BTK 1605V-2.6	16	5	16.75	13.5	1×2.65	5.4	13.3	130	34	54	40	10
BTK 1808V-3.6	18	8	19.3	14.4	1×3.65	13.1	31	210	50	80	61	12
BTK 2005V-2.6	20	5	20.5	17.2	1×2.65	6	16.5	150	40	60	40	10
BTK 2010V-2.6	20	10	21.25	16.4	1×2.65	10.6	25.1	160	52	82	61	12
BTK 2505V-2.6	25	5	25.5	22.2	1×2.65	6.7	20.8	180	43	67	40	10
BTK 2510V-5.3	25	10	26.8	20.2	2×2.65	31.2	83.7	400	60	96	98	15
BTK 2806V-2.6	28	6	28.5	25.2	1×2.65	7	23.4	200	50	80	47	12
BTK 2806V-5.3	28	6	28.5	25.2	2×2.65	12.8	46.8	390	50	80	65	12
BTK 3210V-2.6	32	10	33.75	27.2	1×2.65	19.8	53.8	250	67	103	68	15
BTK 3210V-5.3	32	10	33.75	27.2	2×2.65	36	107.5	490	67	103	98	15
BTK 3610V-2.6	36	10	37	30.5	1×2.65	20.8	59.8	270	70	110	70	17
BTK 3610V-5.3	36	10	37	30.5	2×2.65	37.8	118.7	530	70	110	100	17
BTK 4010V-5.3	40	10	41.75	35.2	2×2.65	40.3	134.9	590	76	116	100	17
BTK 4512V-5.3	45	12	46.5	39.2	2×2.65	49.5	169	650	82	128	118	20
BTK 5016V-5.3	50	16	52.7	42.9	2×2.65	93.8	315.2	930	102	162	145	25

Model number coding

BTK1405V-2.6 ZZ +500L C7 T H1K

- BTK1405V-2.6: Model No.
- ZZ: Contamination protection accessory symbol (*1)
- +500L: Overall screw shaft length (in mm)
- C7: Accuracy symbol (*2)
- T: Symbol for rolled shaft
- H1K: Recommended shaft ends shape code

(*1) See A15-336. (*2) See A15-12.

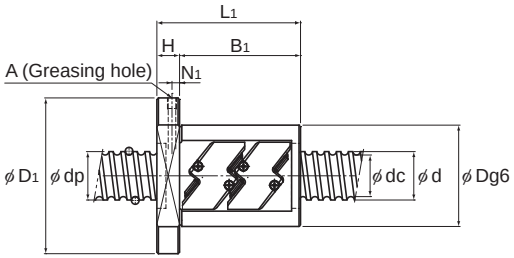

Unit: mm

Nut dimensions							Axial clear-ance	Standard shaft length	Screw shaft inertial moment/mm	Nut mass	Shaft mass
					Greasing hole						
	B_1	PCD	d_1	Tw	N_1	A			kg-cm²/mm	kg	kg/m
	28	34	4.5	29	—	3	0.05	200, 300, 500, 1000	7.71×10^{-5}	0.12	0.48
	36	37	4.5	32	—	3	0.05	200, 300, 500, 1000	1.6×10^{-4}	0.18	0.72
	30	40	4.5	37	5	M6	0.1	500, 1000	2.96×10^{-4}	0.23	1
	30	40	4.5	38	5	M6	0.1	500, 1000	2.96×10^{-4}	0.22	0.99
	30	44	4.5	40	5	M6	0.1	500, 1000, 1500	5.05×10^{-4}	0.24	1.34
	49	65	6.6	60	5	M6	0.1	500, 1000, 1500	8.09×10^{-4}	0.84	1.71
	30	50	4.5	46	5	M6	0.1	500, 1000, 1500, 2000	1.23×10^{-3}	0.32	2.15
	49	67	6.6	64	5	M6	0.1	500, 1000, 1500, 2000	1.23×10^{-3}	0.93	2.16
	30	55	5.5	50	5	M6	0.1	500, 1000, 1500, 2000	3.01×10^{-3}	0.34	3.45
	83	78	9	72	5	M6	0.1	500, 1000, 1500, 2000	3.01×10^{-3}	1.83	3.26
	35	65	6.6	60	6	M6	0.1	500, 1000, 2000, 2500	4.74×10^{-3}	0.59	4.44
	53	65	6.6	60	6	M6	0.1	500, 1000, 2000, 2500	4.74×10^{-3}	0.75	4.44
	53	85	9	78	5	M6	0.14	500, 1000, 1500, 2000, 2500, 3000	8.08×10^{-3}	1.56	5.49
	83	85	9	78	5	M6	0.14	500, 1000, 1500, 2000, 2500, 3000	8.08×10^{-3}	2.1	5.49
	53	90	11	82	7	M6	0.17	500, 1000, 2000, 2500, 3000	1.29×10^{-2}	1.78	6.91
	83	90	11	82	7	M6	0.17	500, 1000, 2000, 2500, 3000	1.29×10^{-2}	2.35	6.91
	83	96	11	88	7	M6	0.17	1000, 1500, 2000, 2500, 3000, 3500	1.97×10^{-2}	2.6	8.81
	98	104	14	94	8	M6	0.17	1000, 1500, 2000, 3000, 3500, 4000	3.16×10^{-2}	3.48	11.08
	120	132	18	104	12.5	R1/8 (PT1/8)	0.2	1000, 1500, 2000, 3000, 3500, 4000	4.82×10^{-2}	6.52	13.66

Note) The overall length of the nut will increase when equipping the QZ lubricating device. See A15-344 for further details.

Options⇒A15-335

MTF
No Preload

DN value	50000

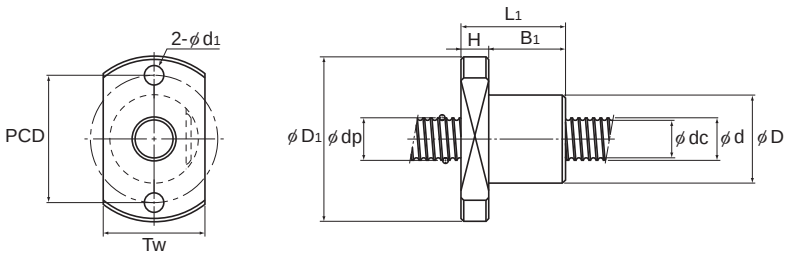

Unit: mm

Model No.	Screw shaft outer diameter	Lead	Ball center-to-center diameter	Thread minor diameter	No. of loaded circuits	Basic load rating		Rigidity	Nut dimensions		
						Ca	C_0a	K	Outer diameter	Flange diameter	Overall length
	d	Ph	dp	dc	Rows X turns	kN	kN	N/μm	D	D_1	L_1
MTF 0601-3.7	6	1	6.15	5.3	1×3.7	0.7	1.2	70	13	30	21
MTF 0802-3.7	8	2	8.3	6.6	1×3.7	2.1	3.8	90	20	40	28
MTF 1002-3.7	10	2	10.3	8.6	1×3.7	2.3	4.8	110	23	43	28
MTF 1202-3.7	12	2	12.3	10.6	1×3.7	2.5	5.8	130	25	47	30

Model No.	Nut dimensions					Axial clear-ance	Standard shaft length	Screw shaft inertial moment/mm	Nut mass	Shaft mass
	H	B_1	PCD	d_1	Tw			kg-cm²/mm	kg	kg/m
MTF 0601-3.7	5	16	21.5	3.4	17	0.05	150, 250	9.99×10^{-6}	0.03	0.19
MTF 0802-3.7	6	22	30	4.5	24	0.05	150, 250	3.16×10^{-5}	0.08	0.31
MTF 1002-3.7	6	22	33	4.5	27	0.05	200, 300	7.71×10^{-5}	0.1	0.52
MTF 1202-3.7	8	22	36	5.5	29	0.05	200, 300	1.6×10^{-4}	0.13	0.77

Note) Model MTF cannot be attached with seal.
Model MTF is only sold as sets (ball screw nut and screw shaft).
Model MTF is applied only with anti-rust oil.

Model number coding

MTF 0802-3.7 +250L C7 T

- MTF 0802-3.7: Model No.
- +250L: Overall screw shaft length (in mm)
- C7: Accuracy code: (No code for Normal Grade)
- T: Symbol for rolled shaft

WHF (Rolled Ball Screw) No Preload

DN value	100000

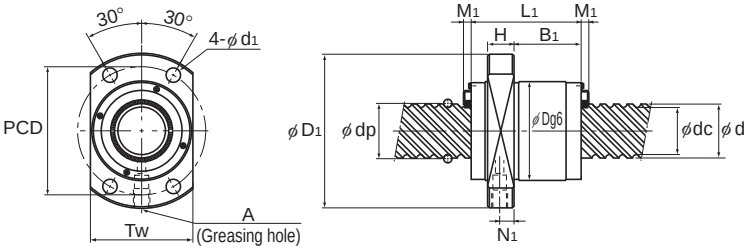

Unit: mm

Model No.	Screw shaft outer diameter	Lead	Ball center-to-center diameter	Thread minor diameter	No. of loaded circuits	Basic load rating		Rigidity	Nut dimensions				
						Ca	C_0a	K	Outer diameter	Flange diameter	Overall length		
	d	Ph	dp	dc	Rows X turns	kN	kN	N/μm	D	D_1	L_1	H	B_1
WHF 1530-3.4	15	30	15.75	12.5	2×1.7	5.5	12.2	195	32	53	64.5	10	47.5
WHF 2020-3.4	20	20	20.75	17.5	2×1.7	6.6	18.9	225	42	64	47.1	10	24.1
WHF 2040-3.4	20	40	20.75	17.5	2×1.7	6.6	17.2	256	37	62	82.7	10	65.7
WHF 2525-3.4	25	25	26	21.9	2×1.7	10.5	29.9	285	50	77	58.8	12	31.3
WHF 2550-3.4	25	50	26	21.9	2×1.7	10.4	27.1	323	45	69	103.3	12	79.3

Model No.	Nut dimensions					Seal	Axial clearance	Standard shaft length	Screw shaft inertial moment/mm	Nut mass	Shaft mass
				Greasing hole							
	PCD	d_1	Tw	N_1	A	M_1			$kg\text{-}cm^2/mm$	kg	kg/m
WHF 1530-3.4	43	5.5	33	5	M6	3.5	0.1	500, 1000, 1500	3.9×10^{-4}	0.38	1.26
WHF 2020-3.4	53	5.5	46	5	M6	3.5	0.1	500, 1000, 1500	1.23×10^{-3}	0.49	2.25
WHF 2040-3.4	50	5.5	46	5	M6	3.5	0.1	500, 1000, 1500, 2000	1.23×10^{-3}	0.58	2.34
WHF 2525-3.4	63	6.6	56	6	M6	3.5	0.1	1000, 1500, 2000	3.01×10^{-3}	0.65	3.52
WHF 2550-3.4	57	6.6	46	6	M6	3.5	0.1	1000, 1500, 2000	3.01×10^{-3}	0.72	3.66

Note) WHF is available on a made-to-order basis. If planning to use this model, contact THK.
The overall length of the nut will increase when equipping the QZ lubricating device. See A15-344 for further details.

Model number coding

WHF2040-3.4 -ZZ +1500L C7 T T1K

- WHF2040-3.4: Model No.
- -ZZ: Contamination protection accessory symbol (*1)
- +1500L: Overall screw shaft length (in mm)
- C7: Accuracy symbol (*2)
- T: Symbol for rolled shaft
- T1K: Recommended shaft ends shape code

(*1) See A15-336. (*2) See A15-12.

Options⇒A15-335

BLK (Rolled Ball Screw) No Preload

DN value	70000

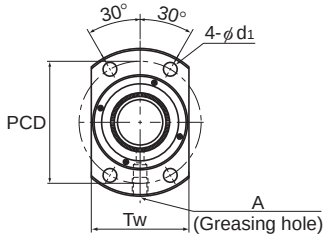

Model No.	Screw shaft outer diameter d	Lead Ph	Ball center-to-center diameter dp	Thread minor diameter dc	No. of loaded circuits Rows X turns	Basic load rating Ca kN	Basic load rating C0a kN	Rigidity K N/μm	Outer diameter D	Flange diameter D1	Overall length L1	H
BLK 1510-5.6	15	10	15.75	12.5	2×2.8	9.8	25.2	260	34	57	44	10
BLK 1616-3.6	16	16	16.65	13.7	2×1.8	5.8	12.9	170	32	53	38	10
BLK 1616-7.2	16	16	16.65	13.7	4×1.8	10.5	25.9	340	32	53	38	10
BLK 2020-3.6	20	20	20.75	17.5	2×1.8	7.7	22.3	210	39	62	45	10
BLK 2020-7.2	20	20	20.75	17.5	4×1.8	13.9	44.6	410	39	62	45	10
BLK 2525-3.6	25	25	26	21.9	2×1.8	12.1	35	270	47	74	55	12
BLK 2525-7.2	25	25	26	21.9	4×1.8	21.9	69.9	520	47	74	55	12
BLK 3232-3.6	32	32	33.25	28.3	2×1.8	17.3	53.9	330	58	92	70	15
BLK 3232-7.2	32	32	33.25	28.3	4×1.8	31.3	107.8	650	58	92	70	15
BLK 3620-5.6	36	20	37.75	31.2	2×2.8	39.8	121.7	570	70	110	78	17
BLK 3624-5.6	36	24	38	30.7	2×2.8	46.2	137.4	590	75	115	94	18
BLK 3636-3.6	36	36	37.4	31.7	2×1.8	22.4	70.5	370	66	106	77	17
BLK 3636-7.2	36	36	37.4	31.7	4×1.8	40.6	141.1	730	66	106	77	17
BLK 4040-3.6	40	40	41.75	35.2	2×1.8	28.1	89.8	420	73	114	85	17
BLK 4040-7.2	40	40	41.75	35.2	4×1.8	51.1	179.6	810	73	114	85	17
BLK 5050-3.6	50	50	52.2	44.1	2×1.8	42.1	140.4	510	90	135	106	20
BLK 5050-7.2	50	50	52.2	44.1	4×1.8	76.3	280.7	1000	90	135	106	20

Model number coding

BLK3232-3.6 ZZ +1500L C7 T H1K

- BLK3232-3.6: Model No.
- ZZ: Contamination protection accessory symbol (*1)
- +1500L: Overall screw shaft length (in mm)
- C7: Accuracy symbol (*2)
- T: Symbol for rolled shaft
- H1K: Recommended shaft ends shape code

(*1) See A15-336. (*2) See A15-12.

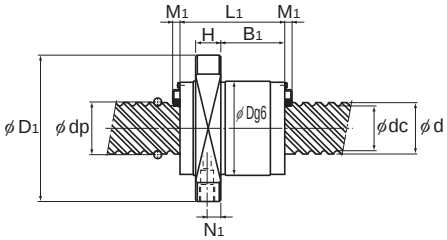

Unit: mm

Nut dimensions							Axial clear-ance	Standard shaft length	Screw shaft inertial moment/mm	Nut mass	Shaft mass
					Greasing hole		Seal				
B_1	PCD	d_1	Tw	N_1	A	M_1			kg-cm²/mm	kg	kg/m
24	45	5.5	40	5	M6	3.5	0.1	500, 1000	3.9×10^{-4}	0.26	1.16
21.5	42	4.5	38	5	M6	3.5	0.1	500, 1000, 1500	5.05×10^{-4}	0.21	1.35
21.5	42	4.5	38	5	M6	3.5	0.1	500, 1000, 1500	5.05×10^{-4}	0.25	1.35
27.5	50	5.5	46	5	M6	3.5	0.1	500, 1000, 1500	1.23×10^{-3}	0.35	2.18
27.5	50	5.5	46	5	M6	3.5	0.1	500, 1000, 1500	1.23×10^{-3}	0.35	2.18
35	60	6.6	56	6	M6	3.5	0.1	500, 1000, 1500, 2000, 2500	3.01×10^{-3}	0.64	3.41
35	60	6.6	56	6	M6	3.5	0.1	500, 1000, 1500, 2000, 2500	3.01×10^{-3}	0.64	3.41
45	74	9	68	7.5	M6	3.8	0.14	1000, 1500, 2000, 2500, 3000	8.08×10^{-3}	1.14	5.69
45	74	9	68	7.5	M6	3.8	0.14	1000, 1500, 2000, 2500, 3000	8.08×10^{-3}	1.14	5.69
45	90	11	80	8.5	M6	5	0.17	1000, 1500, 2000, 2500, 3000	1.29×10^{-2}	1.74	7.09
59	94	11	86	9	M6	5	0.17	1000, 1500, 2000, 2500, 3000	1.29×10^{-2}	2.42	7.02
50	85	11	76	8.5	M6	5	0.17	1000, 1500, 2000, 2500, 3000	1.29×10^{-2}	1.74	7.12
50	85	11	76	8.5	M6	5	0.17	1000, 1500, 2000, 2500, 3000	1.29×10^{-2}	1.74	7.12
56.5	93	11	84	8.5	M6	5.4	0.17	1000, 1500, 2000, 2500, 3000, 4000	1.97×10^{-2}	2.16	8.76
56.5	93	11	84	8.5	M6	5.4	0.17	1000, 1500, 2000, 2500, 3000, 4000	1.97×10^{-2}	2.16	8.76
72	112	14	104	10	M6	5.4	0.2	1000, 1500, 2000, 3000, 4000	4.82×10^{-2}	3.89	13.79
72	112	14	104	10	M6	5.4	0.2	1000, 1500, 2000, 3000, 4000	4.82×10^{-2}	3.86	13.79

Note) The overall length of the nut will increase when equipping the QZ lubricating device. See A15-344 for further details.

WTF
No Preload

DN value	70000

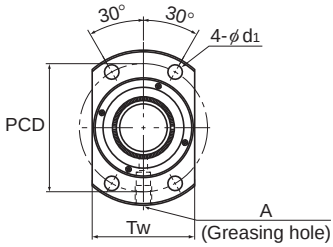

Model No.	Screw shaft outer diameter d	Lead Ph	Ball center-to-center diameter dp	Thread minor diameter dc	No. of loaded circuits Rows X turns	Basic load rating Ca kN	Basic load rating C0a kN	Rigidity K N/μm	Outer diameter D	Flange diameter D1	Overall length L1	H
WTF 1520-3	15	20	15.75	12.5	2×1.5	5.5	14.2	140	32	53	45	10
WTF 1520-6	15	20	15.75	12.5	4×1.5	10.1	28.5	280	32	53	45	10
WTF 1530-2	15	30	15.75	12.5	4×0.6	4.3	9.3	120	32	53	33	10
WTF 1530-3	15	30	15.75	12.5	2×1.6	5.6	12.4	160	32	53	63	10
WTF 2040-2	20	40	20.75	17.5	4×0.65	5.4	13.6	160	37	57	41.5	10
WTF 2040-3	20	40	20.75	17.5	2×1.65	6.6	17.2	200	37	57	81.5	10
WTF 2550-2	25	50	26	21.9	4×0.65	8.5	21.2	200	45	69	52	12
WTF 2550-3	25	50	26	21.9	2×1.65	10.4	26.9	260	45	69	102	12
WTF 3060-2	30	60	31.25	26.4	4×0.65	11.8	30.6	240	55	89	62.5	15
WTF 3060-3	30	60	31.25	26.4	2×1.65	14.5	38.9	310	55	89	122.5	15
WTF 4080-2	40	80	41.75	35.2	4×0.65	19.8	54.5	320	73	114	79	17
WTF 4080-3	40	80	41.75	35.2	2×1.65	24.3	69.2	400	73	114	159	17
WTF 50100-2	50	100	52.2	44.1	4×0.65	29.6	85.2	390	90	135	98	20
WTF 50100-3	50	100	52.2	44.1	2×1.65	36.3	108.1	500	90	135	198	20

Model number coding

WTF3060-3 ZZ +1500L C7 T H1K

- WTF3060-3: Model No.
- ZZ: Contamination protection accessory symbol (*1)
- +1500L: Overall screw shaft length (in mm)
- C7: Accuracy symbol (*2)
- T: Symbol for rolled shaft
- H1K: Recommended shaft ends shape code

(*1) See A15-336. (*2) See A15-12.

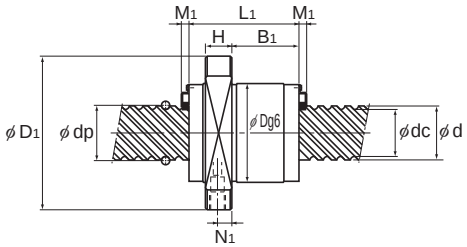

Unit: mm

Nut dimensions							Axial clear-ance	Standard shaft length	Screw shaft inertial moment/mm	Nut mass	Shaft mass
					Greasing hole						
	B_1	PCD	d_1	Tw	N_1	A	Seal M_1			kg-cm²/mm	kg	kg/m
	28	43	5.5	33	5	M6	3.5	0.1	500, 1000	3.9×10^{-4}	0.2	1.17
	28	43	5.5	33	5	M6	3.5	0.1	500, 1000	3.9×10^{-4}	0.2	1.17
	17	43	5.5	33	5	M6	3.5	0.1	500, 1000, 1500	3.9×10^{-4}	0.22	1.19
	47	43	5.5	33	5	M6	3.5	0.1	500, 1000, 1500	3.9×10^{-4}	0.4	1.19
	25.5	47	5.5	38	5.5	M6	3.5	0.1	500, 1000, 1500, 2000	1.23×10^{-3}	0.25	2.12
	65.5	47	5.5	38	5.5	M6	3.5	0.1	500, 1000, 1500, 2000	1.23×10^{-3}	0.5	2.12
	31.5	57	6.6	46	7	M6	3.5	0.1	1000, 1500, 2000, 3000	3.01×10^{-3}	0.45	3.34
	81.5	57	6.6	46	7	M6	3.5	0.1	1000, 1500, 2000, 3000	3.01×10^{-3}	0.85	3.34
	37.5	71	9	56	9	M6	3.8	0.14	1000, 2000, 3000, 4000	6.24×10^{-3}	0.8	4.84
	97.5	71	9	56	9	M6	3.8	0.14	1000, 2000, 3000, 4000	6.24×10^{-3}	1.7	4.84
	50.5	93	11	74	8.5	M6	5.4	0.17	1000, 1500, 2000, 3000	1.97×10^{-2}	2.1	8.66
	130.5	93	11	74	8.5	M6	5.4	0.17	1000, 1500, 2000, 3000	1.97×10^{-2}	3.67	8.66
	64	112	14	92	10	M6	5.4	0.2	1500, 3000	4.82×10^{-2}	3.5	13.86
	164	112	14	92	10	M6	5.4	0.2	1500, 3000	4.82×10^{-2}	6.4	13.86

Note) The overall length of the nut will increase when equipping the QZ lubricating device. See A15-344 for further details.

Options⇒A15-335

BNT (Rolled Ball Screw) No Preload

DN value	50000

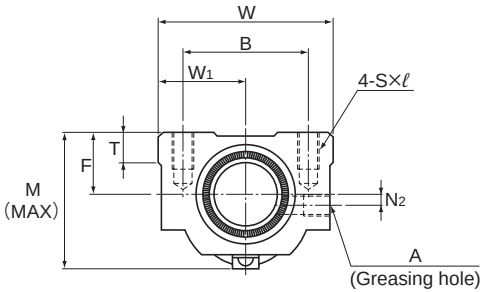

Model No.	Screw shaft outer diameter	Lead	Ball center-to-center diameter	Thread minor diameter	No. of loaded circuits	Basic load rating		Rigidity			
						Ca	C_0a	K	Width	Center height	Overall length
	d	Ph	dp	dc	Rows × turns	kN	kN	N/μm	W	F	L_1
BNT 1404-3.6	14	4	14.4	11.5	1×3.65	5.5	11.5	150	34	13	35
BNT 1405-2.6		5	14.5	11.2	1×2.65	5	11.4	110	34	13	35
BNT 1605-2.6	16	5	16.75	13.5	1×2.65	5.4	13.3	130	42	16	36
BNT 1808-3.6	18	8	19.3	14.4	1×3.65	13.1	31	210	48	17	56
BNT 2005-2.6	20	5	20.5	17.2	1×2.65	6	16.5	150	48	17	35
BNT 2010-2.6		10	21.25	16.4	1×2.65	10.6	25.1	160	48	18	58
BNT 2505-2.6	25	5	25.5	22.2	1×2.65	6.7	20.8	180	60	20	35
BNT 2510-5.3		10	26.8	20.2	2×2.65	31.2	83.7	400	60	23	94
BNT 2806-2.6	28	6	28.5	25.2	1×2.65	7	23.4	200	60	22	42
BNT 2806-5.3			28.5	25.2	2×2.65	12.8	46.8	390	60	22	67
BNT 3210-2.6	32	10	33.75	27.2	1×2.65	19.8	53.8	250	70	26	64
BNT 3210-5.3			33.75	27.2	2×2.65	36	107.5	490	70	26	94
BNT 3610-2.6	36	10	37	30.5	1×2.65	20.8	59.3	270	86	29	64
BNT 3610-5.3			37	30.5	2×2.65	37.8	118.7	530	86	29	96
BNT 4512-5.3	45	12	46.5	39.2	2×2.65	49.5	169	650	100	36	115

Model number coding

BNT2010-2.6 ZZ +1000L C7 T H1K

- BNT2010-2.6: Model No.
- ZZ: Contamination protection accessory symbol (*1)
- +1000L: Overall screw shaft length (in mm)
- C7: Accuracy symbol (*2)
- T: Symbol for rolled shaft
- H1K: Recommended shaft ends shape code

(*1) See A15-336. (*2) See A15-12.

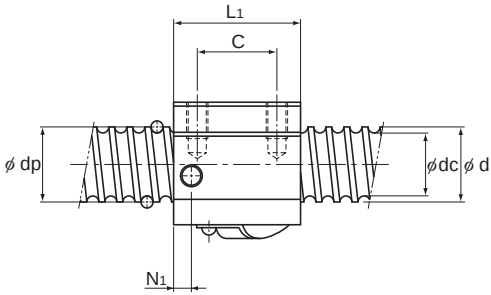

Unit: mm

Nut dimensions										Axial clear-ance	Screw shaft inertial moment/mm	Nut mass	Shaft mass
	Mounting hole												
	B	C	S×ℓ	W_1	T	M	N_1	N_2	A		kg-cm²/mm	kg	kg/m
	26	22	M4×7	17	6	30	6	2	M6	0.1	2.96×10^{-4}	0.15	1
	26	22	M4×7	17	6	31	6	2	M6	0.1	2.96×10^{-4}	0.15	0.99
	32	22	M5×8	21	21.5	32.5	6	2	M6	0.1	5.05×10^{-4}	0.3	1.34
	35	35	M6×10	24	10	44	8	3	M6	0.1	8.09×10^{-4}	0.47	1.71
	35	22	M6×10	24	9	39	5	3	M6	0.1	1.23×10^{-3}	0.28	2.15
	35	35	M6×10	24	9	46	10	2	M6	0.1	1.23×10^{-3}	0.5	2.16
	40	22	M8×12	30	9.5	45	7	5	M6	0.1	3.01×10^{-3}	0.41	3.45
	40	60	M8×12	30	10	55	10	—	M6	0.1	3.01×10^{-3}	1.18	3.26
	40	18	M8×12	30	10	50	8	—	M6	0.1	4.74×10^{-3}	0.81	4.44
	40	40	M8×12	30	10	50	8	—	M6	0.1	4.74×10^{-3}	0.78	4.44
	50	45	M8×12	35	12	62	10	—	M6	0.14	8.08×10^{-3}	1.3	5.49
	50	60	M8×12	35	12	62	10	—	M6	0.14	8.08×10^{-3}	2	5.49
	60	45	M10×16	43	17	67	11	—	M6	0.17	1.29×10^{-2}	1.8	6.91
	60	60	M10×16	43	17	67	11	—	M6	0.17	1.29×10^{-2}	2.4	6.91
	75	75	M12×20	50	20.5	80	13	—	M6	0.2	3.16×10^{-2}	4.1	11.08

Note) The overall length of the nut will increase when equipping the QZ lubricating device. See A15-344 for further details.

CNF
No Preload

DN value	70000

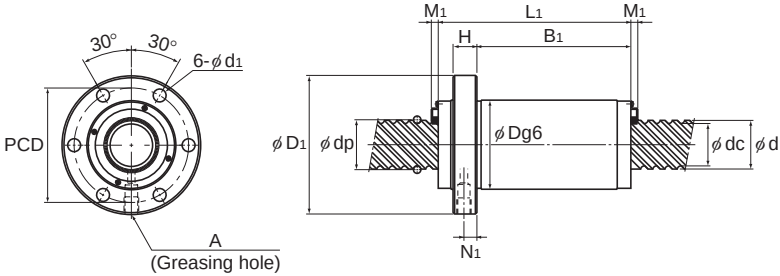

Unit: mm

Model No.	Screw shaft outer diameter	Lead	Ball center-to-center diameter	Thread minor diameter	No. of loaded circuits	Basic load rating		Rigidity	Nut dimensions				
						Ca	C0a	K	Outer diameter	Flange diameter	Overall length		
	d	Ph	dp	dc	Rows X turns	kN	kN	N/μm	D	D_1	L_1	H	B_1
CNF 1530-6	15	30	15.75	12.5	4×1.6	10.1	24.7	310	32	53	63	10	47
CNF 2040-6	20	40	20.75	17.5	4×1.65	12	34.4	400	37	57	81	10	65
CNF 2550-6	25	50	26	21.9	4×1.65	18.9	53.9	460	45	69	102	12	81.5
CNF 3060-6	30	60	31.25	26.4	4×1.65	26.2	77.7	600	55	89	122	15	97

Model No.	Nut dimensions					Axial clearance	Standard shaft length	Screw shaft inertial moment/mm	Nut mass	Shaft mass
			Greasing hole		Seal					
	PCD	d_1	N_1	A	M_1			kg-cm²/mm	kg	kg/m
CNF 1530-6	43	5.5	5	M6	3.5	0.1	500, 1000, 1500	3.9×10^{-4}	0.42	1.19
CNF 2040-6	47	5.5	5.5	M6	3.5	0.1	500, 1000, 1500, 2000	1.23×10^{-4}	0.5	2.12
CNF 2550-6	57	6.6	7	M6	3.5	0.1	1000, 1500, 2000, 3000	3.01×10^{-3}	0.85	3.34
CNF 3060-6	71	9	9	M6	3.8	0.14	1000, 2000, 3000, 4000	6.24×10^{-3}	1.7	4.84

Note) The overall length of the nut will increase when equipping the QZ lubricating device. See A15-344 for further details.

Model number coding

CNF2040-6 ZZ +1500L C7 T H1K

- CNF2040-6: Model No.
- ZZ: Contamination protection accessory symbol (*1)
- +1500L: Overall screw shaft length (in mm)
- C7: Accuracy symbol (*2)
- T: Symbol for rolled shaft
- H1K: Recommended shaft ends shape code

(*1) See A15-336. (*2) See A15-12.

Model Number Coding

Model number coding

Ball Screw Nut

BTK1405V-2.6 ZZ

- BTK1405V-2.6: Model number
- ZZ: Seal symbol
  - no symbol: without seal
  - ZZ: brush seal attached to both ends of the ball screw nut (see A15-336)

Screw Shaft

TS 14 05 +500L C7

- C7: Accuracy symbol (see A15-12) (no symbol for class C10)
- +500L: Overall screw shaft length (in mm)
- 05: Lead (in mm)
- 14: Screw shaft outer diameter (in mm)
- TS: Symbol for rolled ball screw shaft

Combination of the Ball Screw Nut and the Screw Shaft

BTK1405V-2.6 ZZ +500L C7 T

- BTK1405V-2.6: Model number
- T: Symbol for rolled shaft
- C7: Accuracy symbol (see A15-12) (no symbol for class C10)
- +500L: Overall screw shaft length (in mm)
- ZZ: Seal symbol
  - no symbol: without seal
  - ZZ: brush seal attached to both ends of the ball screw nut (see A15-336)

Rolled Ball Screw model JPF

JPF1404-4 RR G0 +500L C7 T

- JPF1404-4: Model number
- T: Symbol for rolled shaft
- C7: Accuracy symbol (see A15-12) (no symbol for class C10)
- +500L: Overall screw shaft length (in mm)
- G0: Axial clearance symbol
- RR: Seal symbol
  - no symbol: without seal
  - RR: Labyrinth seal attached to both ends of the ball screw nut (see A15-336)