Features of the Rod End

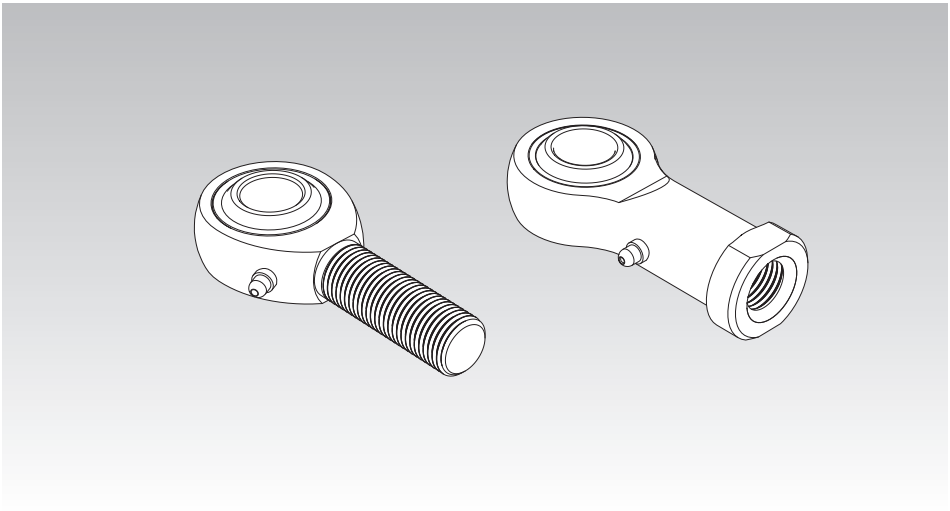

Features

The Rod End is a self-aligning plain bearing that uses a spherical inner ring which has the same level of accuracy and hardness as bearing steel balls. With the combination of a spherical inner ring whose sliding surface is mirror-finished and a rationally designed holder, the Rod End ensures play-free, extremely smooth rotation and oscillation.