Model HSR-M1VV

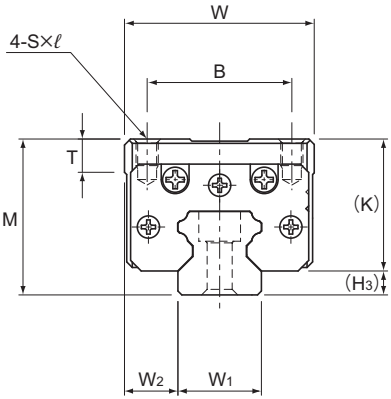

Model No.	Outer dimensions			LM block dimensions						
	Height M	Width W	Length L	B	C	S×ℓ	L_1	T	K	H_3
HSR15M1R-VV	28	34	75	26	26	M4×5	38.8	6	23.7	4.3

Model number coding

HSR15M1R 1 VV C1 +400L P -Ⅱ

- HSR15M1R: Model No.
- 1: No. of LM blocks used on the same rail
- VV: Labyrinth seal symbol (*2)
- C1: Radial clearance symbol (*1)
- +400L: LM rail length (in mm)
- P: Accuracy symbol (*3)
- -Ⅱ: Symbol for No. of rails used on the same plane (*4)

(*1) See A1-74. (*2) See A1-403. (*3) See A1-79. (*4) See A1-13.

Note1) The radial clearance, maximum LM rail length and accuracy class are equal to that of model HSR.
Note2) With this model, a single-rail unit constitutes one set. (I.e., the required number of sets when 2 rails are used in parallel is 2.)

Download data by searching for the corresponding model number on the Technical Support site. https://tech.thk.com

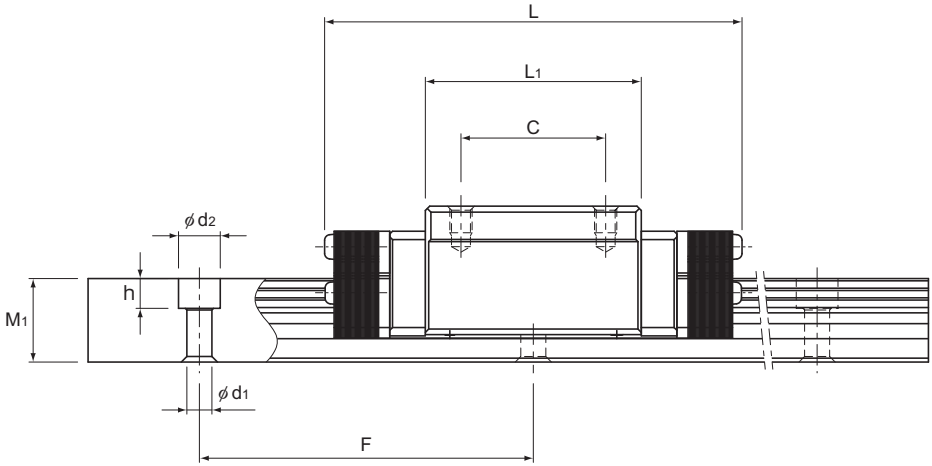

Unit: mm

	LM rail dimensions						Basic load rating		Static permissible moment kN·m*					Mass	
	Width		Height	Pitch		Length*	C	C_0	M_A		M_B		M_C	LM block	LM rail
	W_1 ±0.05	W_2	M_1	F	$d_1 \times d_2 \times h$	Max	kN	kN	1 block	Double blocks	1 block	Double blocks	1 block	kg	kg/m
	15	9.5	15	60	4.5×7.5×5.3	1240	10.9	15.7	0.0945	0.527	0.0945	0.527	0.0998	0.27	1.5

Note) The maximum length under "Length*" indicates the standard maximum length of an LM rail. (See A1-408.)
Static permissible moment* 1 block: the static permissible moment with one LM block
Double blocks: static permissible moment when two LM blocks are in close contact with each other
Total block length L : The total block length L shown in the table is the length with the dust-proof parts (code: VV, with labyrinth end seal).
If a large moment is applied to a system consisting of one LM rail or one LM block per shaft, the labyrinth end seal may contact the LM rail, which could affect the system's motion.
If a moment is applied, it is recommended to use two rails with two LM blocks per rail.
Contact THK for details.

Options⇒A1-503