KR30H Without Cover, Motor Wrap

Model KR30H□□C (with a Single Short Block)
Model KR30H□□D (with Two Short Blocks)
For model number coding, see A2-136.

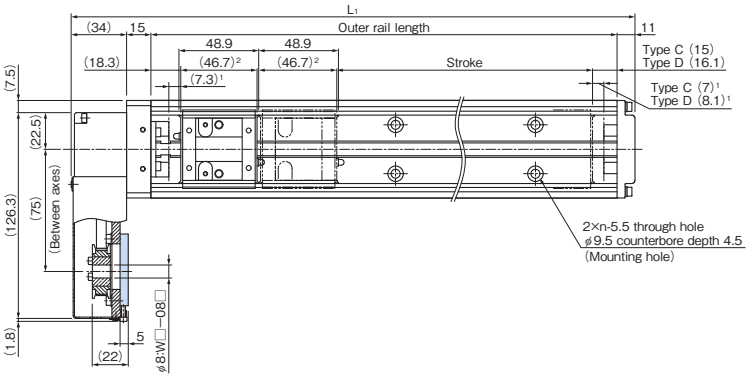

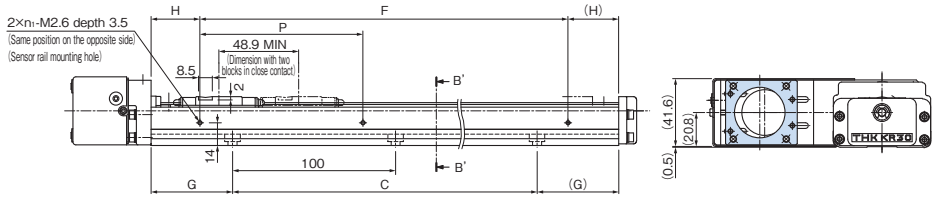

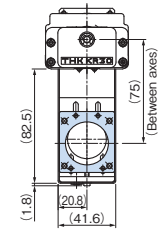

With bottom side motor wrap

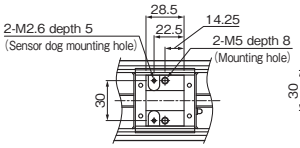

Short block details

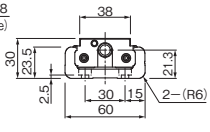

B'-B' cross section

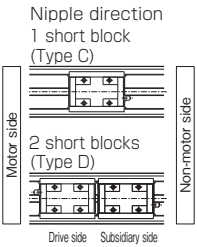

[1] Distance between the mechanical stopper and the stroke starting position.
[2] This indicates the short block length when calculating the possible stroke range.
It is 95.6 mm (total) for a KR30H with two short blocks in close contact with each other (Type D).

Stroke (mm) (stroke between mechanical stoppers)		Outer rail length (mm)	Overall length L_1 (mm)	C (mm)	G (mm)	P (mm)	F (mm)	H (mm)	n	n_1	Overall main unit mass (kg)	
Type C	Type D[1]										Type C	Type D
70 (84.3)	20 (35.4)	150	210	100	25	100	100	25	2	2	1.7	1.9
120 (134.3)	70 (85.4)	200	260	100	50	100	100	50	2	2	2	2.2
220 (234.3)	170 (185.4)	300	360	200	50	200	200	50	3	2	2.6	2.8
320 (334.3)	270 (285.4)	400	460	300	50	200	200	100	4	2	3.2	3.4
420 (434.3)	370 (385.4)	500	560	400	50	200	400	50	5	3	3.7	3.9
520 (534.3)	470 (485.4)	600	660	500	50	200	400	100	6	3	4.3	4.5

[1] Indicates a value when two inner blocks are in close contact with each other.

Download data from the THK Online Services website. https://www.thk.com/

KR30H With Cover, Motor Wrap

Model KR30H□□C (with a Single Short Block)
Model KR30H□□D (with Two Short Blocks)
For model number coding, see A2-136.

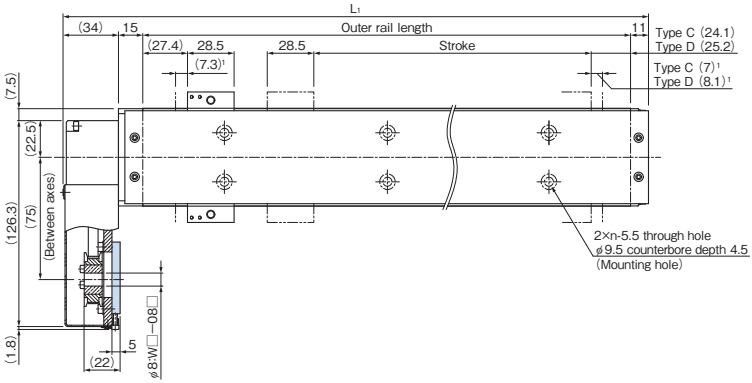

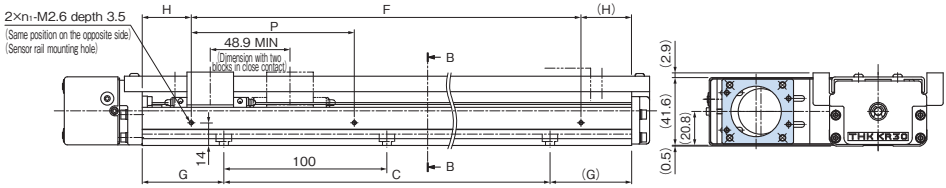

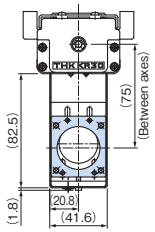

With bottom side motor wrap

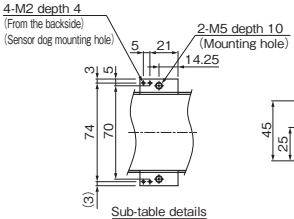

Sub-table details

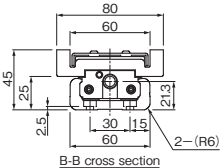

B-B cross section

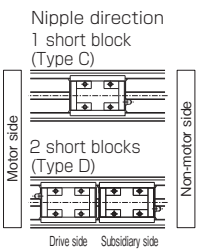

[1] Distance between the mechanical stopper and the stroke starting position.

Stroke (mm) (stroke between mechanical stoppers)		Outer rail length (mm)	Overall length L_1 (mm)	C (mm)	G (mm)	P (mm)	F (mm)	H (mm)	n	n_1	Overall main unit mass (kg)	
Type C	Type D[1]										Type C	Type D
70 (84.3)	20 (35.4)	150	210	100	25	100	100	25	2	2	1.9	2.2
120 (134.3)	70 (85.4)	200	260	100	50	100	100	50	2	2	2.2	2.5
220 (234.3)	170 (185.4)	300	360	200	50	200	200	50	3	2	2.8	3.1
320 (334.3)	270 (285.4)	400	460	300	50	200	200	100	4	2	3.4	3.7
420 (434.3)	370 (385.4)	500	560	400	50	200	400	50	5	3	4.1	4.4
520 (534.3)	470 (485.4)	600	660	500	50	200	400	100	6	3	4.7	5

[1] Indicates a value when two inner blocks are in close contact with each other.

Options⇒A2-193