BNS-V Compact Type: Linear-Rotary Motion No Preload

DN value	100000

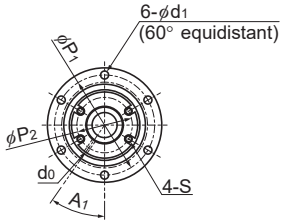

Ball screw unit

Ball screw unit

Model No.	Screw shaft outer diameter	Screw shaft inner diameter	Lead	Ball screw dimensions										
				Basic load rating		Ball center-to-center diameter	Thread minor diameter	Outer diameter	Flange diameter	Overall length				
				Ca	C0a			D			D3			
	d	db	Ph	kN	kN	dp	dc	g6	D1	L1	h7	AE	BE	H
BNS 1616V	16	11	16	4.6	6.8	16.65	13.7	42	54	38	32.5	31	31	4
BNS 2020V	20	14	20	7.3	11.7	20.75	17.5	48	64	45	39.5	37	36	6
BNS 2525V	25	18	25	8	14.4	25.35	22.1	56	72	55	43.5	42	41.6	6

Ball spline

Model No.	Ball spline dimensions											
	Basic load rating		Static permissible moment	Basic torque rating		Outer diameter	Flange diameter	Overall length				
	C	C0	MA	CT	C0T	D7			D6			
	kN	kN	N·m	N·m	N·m	g6	D5	L2	h7	AE1	BE1	H1
BNS 1616V	8.4	13.4	77.4	42.9	68.6	42	54	46.4	32.5	27.5	28	4
BNS 2020V	10.5	18.6	144	66.4	117.2	48	64	59	36	31.5	32	6
BNS 2525V	15.9	26.2	230	125.3	207	56	72	67	43.5	39.5	40	6

Note) For K hollow shaft, please refer to the db dimension for the inner bore diameter of the shaft. If requested solid shaft is also available. See "Ball Spline" A3-118 for details.

Model number coding

BNS2020V +500L C5

- BNS2020V: Model number
- +500L: Overall shaft length (in mm)
- C5: Accuracy symbol (*1)

(*1) See A15-12.

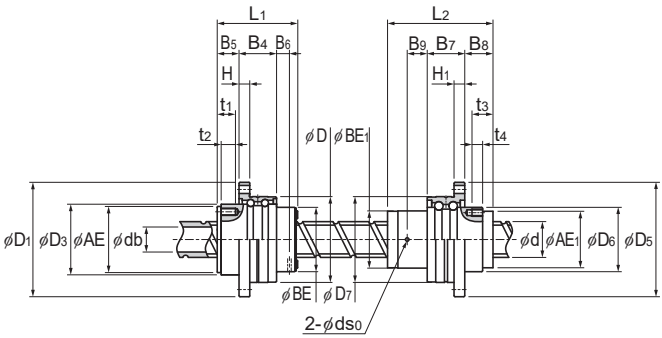

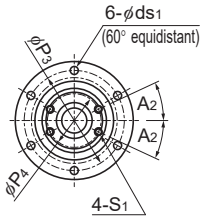

Ball spline

Unit: mm

											Support bearing basic load rating		Nut inertial moment	Screw shaft inertial moment	Nut mass	Shaft mass	Permissible rotational speed
											Ca	C_0a					
B_4	B_5	P_1	P_2	S	t_1	t_2	d_1	B_6	d_0	A_1	kN	kN	kg·m²	kg·m²/mm	kg	kg/m	min⁻¹
18	9.7	48	25.5	M3	8.2	6	3.4	5.8	2	35°	6.7	8.6	2.00×10^{-5}	3.21×10^{-8}	0.21	0.8	5000
21	12.2	56	31	M4	10.2	8	4.5	7.2	2	35°	7.3	10.6	6.50×10^{-5}	8.04×10^{-8}	0.39	1.21	4810
21	13.2	64	36	M5	10.2	8	4.5	15.3	3	35°	9.7	13.4	1.02×10^{-4}	1.91×10^{-7}	0.51	1.79	3940

Unit: mm

											Support bearing basic load rating		Nut inertial moment	Nut mass
											Ca	C_0		
B_7	B_8	P_3	P_4	S_1	t_3	t_4	ds_1	A_2	B_9	ds_0	kN	kN	kg·m²	kg
18	13	48	25	M3	11.5	6	3.4	20°	5	2	5.2	5.1	1.80×10^{-5}	0.19
21	15.8	56	30	M4	11.8	6	4.5	25°	5.4	2	6.7	6.4	4.20×10^{-5}	0.33
21	19.2	64	36	M5	15.2	8	4.5	25°	7.6	3	7.4	7.8	9.80×10^{-5}	0.49

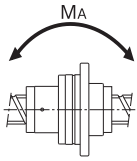

Options⇒A15-333